REALISTIC®

Service Manual

31-3012

STA-2500

SOLID STATE AM/FM STEREO RECEIVER

Catalog Number: 31-3012

CUSTOM MANUFACTURED FOR RADIO SHACK, A DIVISION OF TANDY CORPORATION

CONTENTS

	Page
Specifications	3—4
Disassembly Instructions	5
Block Diagram	6
Digital Tuning System Description	7—8
Microprocessor IC Description	9
Control Key And Mode Switch Matrix	10
AM/FM PLL Circuit Operation Check	11
Auto Stop Circuit For Auto Tuning	12
Microprocessor Circuitry	13
VCO VS FM Band Frequency Curve	14
VCO VS AM Band Frequency Curve	14
Level Diagram	15
Alignment Procedures	16—18
Alignment & Check Points	19
Troubleshooting	20—27
P.C. Board (Top & Bottom Views)	28—37
Wiring Diagram	38
Electrical Parts List	39—51
Mechanical Parts List	52 & 53
Semiconductor Lead Identification	54—55
IC Equivalent Circuits	56—57
Semiconductor Voltage Readings	58—59
Schematic Diagram	SEPARATE SHEET
Exploded View	SEPARATE SHEET

PRODUCT SAFETY NOTICE

Many electrical and mechanical parts in this chassis have special characteristics. These characteristics often pass unnoticed and the protection afforded by them cannot necessarily be obtained by using replacement components rated for higher voltage, wattage, etc. Replacement parts that have these special safety characteristics are identified in this manual and its supplements, electrical components having such features are identified by a ⚠ in the schematic diagram and the parts list.

Before replacing any of these components, read the parts list in this manual carefully. The use of substitute replacement parts that do not have the same safety characteristics as specified in the parts list may create shock, fire, or other hazards.

SPECIFICATIONS

		UNIT	NOMINAL	LIMIT
FM SECTION				
1. Tuning coverage (USA/Canada/Australia)		MHz	87.9–107.9	
2. Usable sensitivity		μV	1.7	2.4
(noise & distortion -30 dB)		dBf	9.8	12.8
3. Image rejection (at 106.1 MHz)		dB	75	65
4. IF Rejection (at 90.1 MHz)		dB	85	75
5. Full limiting (at –3 dB)		μV	1.2	1.8
6. 50 dB Quieting sensitivity at 98.1 MHz		μV	3.0	6.0
7. Distortion (1 mV input)		%	0.1	0.3
8. Signal-to-noise ratio (1 mV input)		dB	70	65
9. De-emphasis (at 50–10000 Hz)		dB	±1.5	±2
10. AM rejection ratio (100 μV–20 mV input)		dB	50	40
11. Search level (at 98.1 MHz)		μV	15	10–25
12. Output voltage	MONO	V	0.55	0.55±3dB
(at 75 kHz dev., 1 kHz mod., 1 mV input)	STEREO	V	0.44	0.44±3dB
13. Muting threshold		μV	15	10–25
14. Overload, THD at 98.1 MHz, 100% mod. (100 mV RF input)		%	0.2	0.5
15. Spurious response at 98.1 MHz Antenna input 3 μV. 1/2 IF, 2x1/2 IF		dB	90	75
16. Capture ratio (1 mV input)		dB	1.0	2.5
17. Alternate channel selectivity (0.1 mV input)		dB	70	60
MPX SECTION				
1. Stereo separation	100 Hz	dB	40	28
(100% mod., 1 mV input)	1 kHz	dB	50	33
	10 kHz	dB	32	25
2. Distortion	1 kHz			
(100% mod., 1 mV input) through low pass filter		%	0.3	0.6
3. Automatic stereo threshold		μV	15	10–25
4. Residual 19 kHz & 38 kHz (1 mV input)		dB	60	55
AM SECTION				
1. Tuning coverage (USA/Canada)		kHz	530–1620	
(Australia)		kHz	531–1602	
2. Usable sensitivity 600 kHz, 1000 kHz, 1400 kHz				
(400 Hz, 30% mod.,	Radiated	μV/m	350	750
noise & distortion –20 dB)	Terminal	μV	25	50
3. Image rejection (at 1400 kHz)		dB	40	35
4. IF rejection (at 600 kHz)		dB	30	25
5. AGC figure of merit (from 100mV/m at 1000 kHz)		dB	45	35
6. Distortion (400 Hz, 30% mod., 5 mV/m input)		%	0.8	2.0
7. IF Bandwidth (6 dB down)		kHz	10	6–14
8. Output voltage (400 Hz, 30% mod., 5 mV/m input)		mV	165	165±3dB
9. Audio response (5 mV/m input from 50 Hz to 2.3 kHz, 0 dB 1000 kHz)		dB	–4	–6
10. Selectivity	200 μV/m	dB	40	35
11. Signal-to-noise ratio (1000 kHz, with antenna input 5 mV/m)		dB	45	38

		UNIT	NOMINAL	LIMIT
12. RF overload 400 Hz 80% mod. 100 mV input		%	1	3
13. Search level		μV/m	500	500±4dB
AUDIO SECTION				
1. RMS Output power				
(distortion < 0.05%, 20 Hz – 20 kHz)				
Both channels driven	8Ω	W	105	100
2. IM Distortion (at 80 W output 70/7000 Hz 4/1)		%	0.01	0.05
3. Harmonic distortion (at 80 W output)				
	20 Hz	%	0.01	0.02
	1000 Hz	%	0.01	0.02
	20000 Hz	%	0.01	0.05
4. Frequency response				
(AUX, 8Ω load, 1 W output)	30 Hz – 20 kHz	dB	±1	±1.5
5. Input sensitivity (for 30 W output)	PHONO 1, 2	mV	2.5	2.5±0.3
	AUX	mV	150	150±30
	TAPE 1, 2	mV	150	150±30
6. Input impedance	PHONO 1, 2	kΩ	50	
	AUX	kΩ	70	
	TAPE 1, 2	kΩ	70	
7. Tone control	BASS 100 Hz	dB	±10	±10±2
	MID 1.5 kHz	dB	±6	±6±2
	TREBLE 10 kHz	dB	±10	±10±2
8. Equalization RIAA:	30–15000 Hz	dB		RIAA±2
9. Phono amp over load capability (at 0.5% THD)		mV	170	140
10. High filter	10 kHz	dB	-4	-4±2
11. Loudness compensation (Volume -30 dB)				
	10 kHz	dB	+4	+4±2
	100 Hz	dB	+6	+6±2
12. Channel separation	4.7 kohm shorted			
(AUX input 100–10000 Hz)		dB	50	40
13. Signal-to-noise ratio (input shorted)				
at 10 mV, IHF-A	PHONO	dB	84	80
	AUX	dB	100	90
14. Residual Noise		mV	0.8	2.0
15. Load impedance		ohm		4–16
16. Power requirements 120 Volts, 60 Hz AC*				
38 Watts, no signal				
395 Watts, full signal (8Ω, 100 W both channels)				

*240 V AC, 50 Hz for Australian models

Note: Nominal specs represent the design specs; all units should be able to approximate these–some will exceed and some may drop slightly below these specs. Limit specs represent the absolute worst condition which still might be considered acceptable; in no case should a unit perform to less than within any limit spec.

DISASSEMBLY INSTRUCTIONS

1. To remove the side cabinets:
   Remove eight screws (56) from both sides.
2. To remove the top cover:
   Remove three screws (49) from the rear panel, then remove the top cover.
3. To remove the front panel:
   Remove two screws (54) from top and two screws (47) from bottom of the front panel, then remove the front panel.
4. To remove the bottom plate:
   Remove four screws (55) from plastic feet.
   Remove eight screws (47) from bottom plate, then remove the bottom plate.

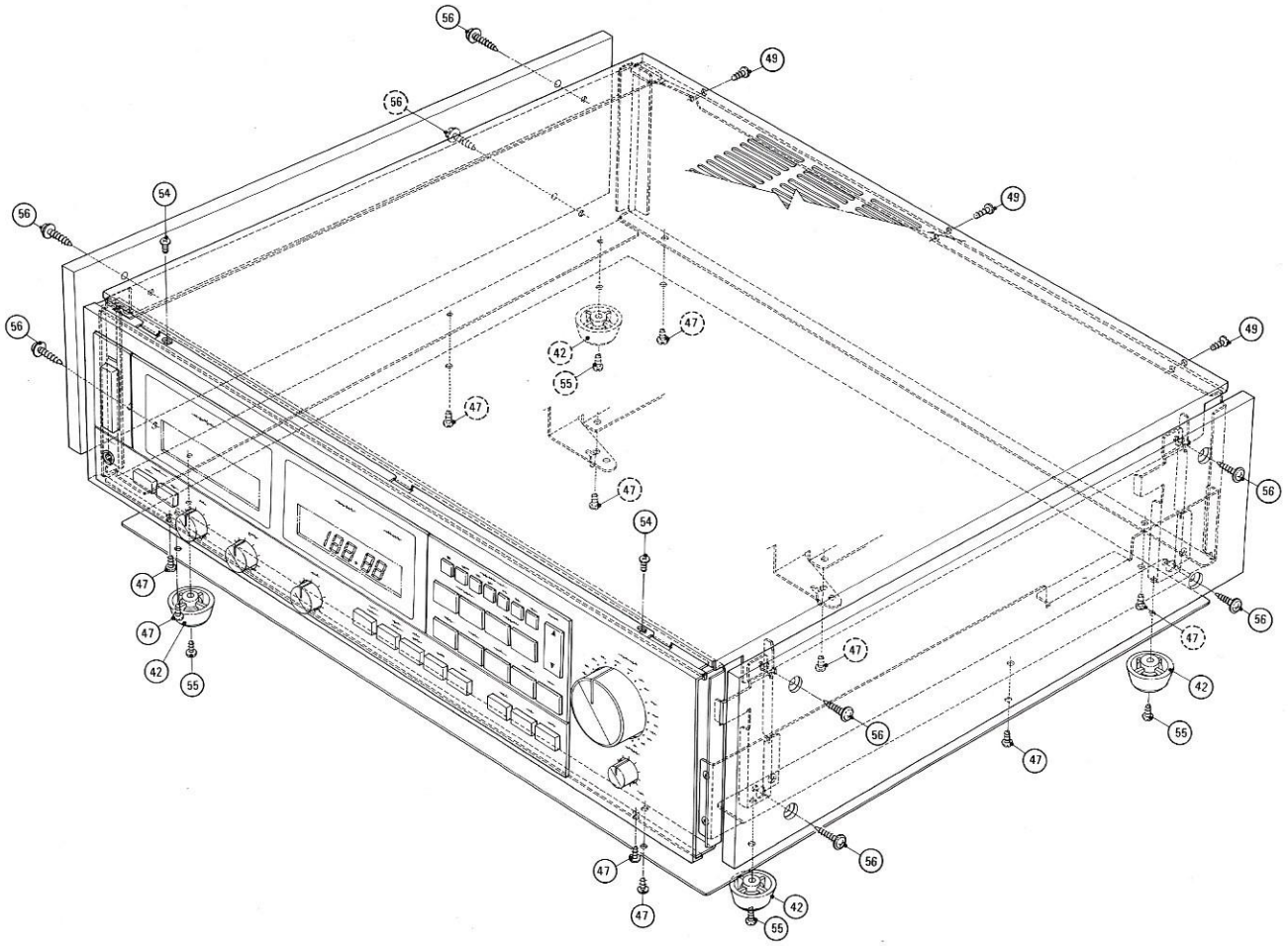

BLOCK DIAGRAM

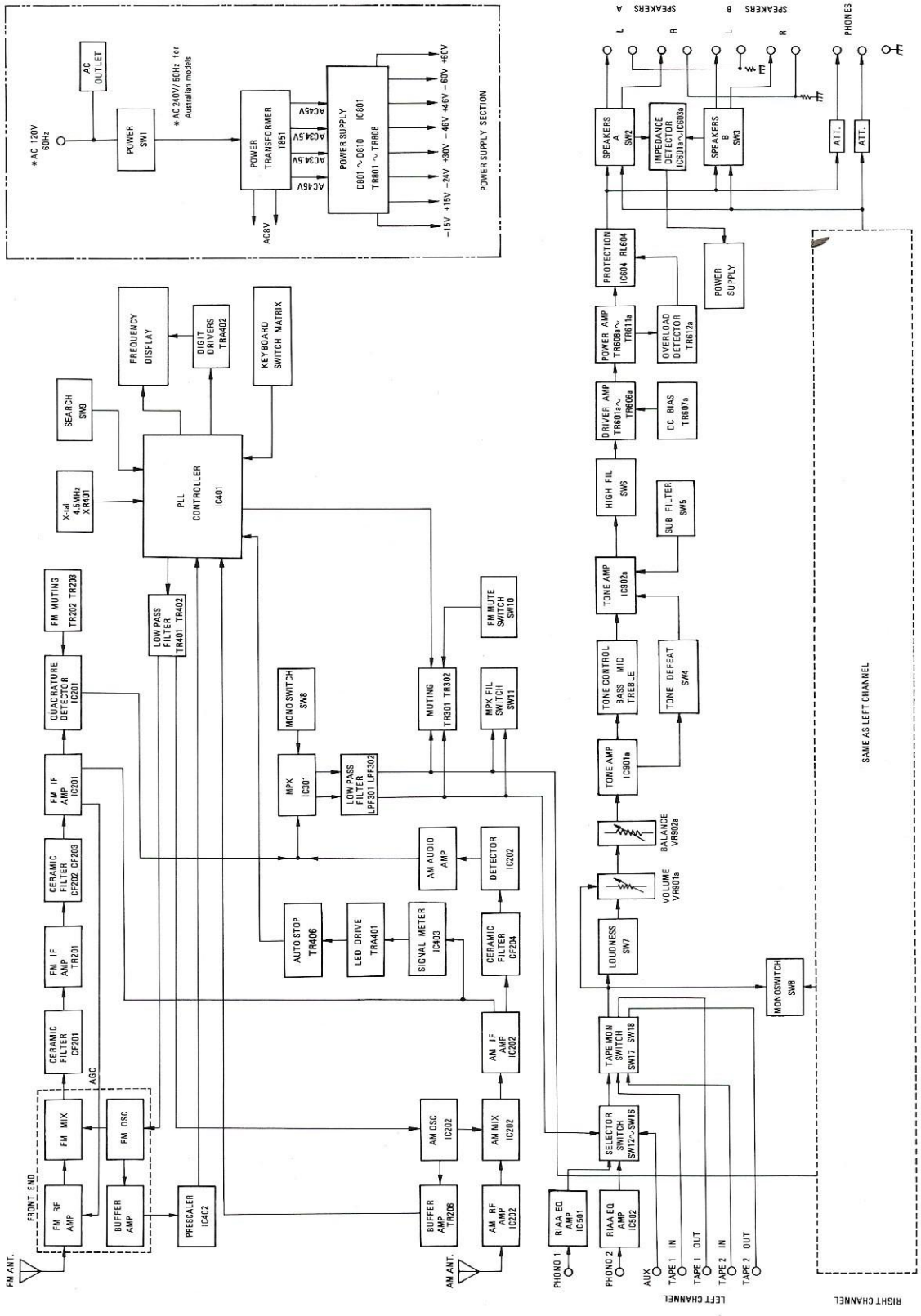

DIGITAL TUNING SYSTEM DESCRIPTION

The STA-2500's digital tuning system provides full electronic control of a vari-cap tuned FM/AM receiver. The block diagram of the system is shown in Fig. 1. This is a phase-locked loop digital tuning system which consists of two integrated circuits; controller plus PLL in a single chip, and two-modulus pre-scaler. The controller chip (IC401) provides phase-locked loop capability with on-chip frequency division, a reference oscillator whose frequency is controlled by an external crystal of 4.5 MHz, and phase comparator circuitry. It accepts directly an AM local oscillator signal and an FM signal from two-modulus pre-scaler (IC402), and outputs control signals for closed loop operation of these oscillators.
The outputs drive filters for supplying analog voltages to the vari-cap tuners. The controller also provides the signals to drive the display. The frequency of the tuned station is displayed on a 4.5 digit multiplexed display. Six favorite stations on each band can be stored as well as "last stations tuned" information.

Example of FM operation
When receiving 98.1 MHz, the VCO generates 108.8 MHz (98.1 + 10.7 (IF) MHz). The signal passes through buffer amp and pre-scaler IC402 and then is applied to pin 26 of PLL IC, IC401.
This frequency is divided by N1 & N2 (N1 = 0, N2 = 136) together with pre-scaler IC402 and PLL & controller IC401; the resulting output will be 25 kHz.

The reference oscillator 4.5 MHz is divided by 180 (again by IC401) resulting in another 25 kHz frequency.

These two 25 kHz signals are fed to the phase detector. An error voltage is generated by the phase detector, which is proportional to the phase difference between these two 25 kHz signals. This error voltage appears at pin 1 of IC401 and passes through the LPF where the error voltage is integrated, and harmonics and noise are filtered out. The resulting DC voltage is applied to the varicap diodes (part of VCO) whose capacity varies with applied DC voltage. Thus the output frequency of VCO is corrected. With proper circuit design and precise adjustments, the VCO frequency is accurate and precise when the system is "locked", meaning the phase detector senses no phase differences between the two 25 kHz signals and the VCO generates a frequency which is as accurate and stable as the reference crystal oscillator.

Example of AM operation (The basic PLL circuitry system is same as in FM mode.)
When receiving 1000 kHz, VCO generates a 1450 kHz signal (1000 + 450 (IF) kHz). The AM VCO output signal, 1450 kHz, which passes through buffer amp TR205 is applied to Pin 28 of PLL IC 401. This frequency is divided by N (=145). The resulting output will be 10 kHz.

The reference oscillator 4.5 MHz, is divided by 450, resulting in another 10 kHz frequency.

These two 10 kHz signals are fed to the phase detector. An error voltage is generated by the phase detector, which is in proportion to the phase difference between these two 10 kHz signals. This error voltage appears at Pin 1 of IC401 and passes through the LPF where the error voltage is integrated, and harmonics and noise are filtered out. The resulting DC voltage is applied to the varicap diode D210 (part of VCO) whose capacity varies with applied DC voltage. Thus the output frequency of VCO is corrected. With proper circuit design and precise adjustments, the VCO frequency is accurate and precise.
When the system is "locked", the phase detector senses no phase differences and generates a frequency which is as accurate and stable as the reference crystal oscillator.

Notes:
1. Pre-scaler In FM mode, the maximum frequency of a local oscillator is about 120 MHz, while the control IC IC401 operates in the 8.8 MHz frequency range. Thus, the pre-scaler is necessary in the front stage of a control IC. The resulting FM VCO freauency is divided by $^1/_{16}$ or $^1/_{17}$ pre-scaler.

2. The values of divider N1 & N2 can be calculated as follows:

FM band: VCO frequency = $f_{REF} \times 2(16 \times N2 + N1)$
N2 = VCO frequency(= receiving frequency + 10.7 MHz)
$\div f_{REF}$(25 kHz) $\div 2 \div 16$
N1 = VCO frequency $\div f_{REF} \div 2 - 16 \times N2$

	USA/CANADA	European	Australian
Receiving frequency (MHz)	87.9 — 107.9	87.5 — 108.0	87.9 — 107.9
VCO frequency (MHz)	98.6 — 118.6	98.2 — 118.7	98.6 — 118.6
N2	123 — 148	122 — 148	123 — 148
N1	0 4 8 12	0 — 15	Even number between 0 and 14

AM band: N = VCO frequency (= receiving frequency + 450kHz) $\times f_{REF}$

	USA/CANADA	European	Australian
Tuning range (kHz)	530 — 1620	522 — 1611	531 — 1602
f_{REF}(kHz)	10	9	9
N	98 — 207	108 — 229	109 — 228

3. Reference oscillator 4.5 MHz is divided by divider of IC401.
FM band: 180 = 4.5 MHz $\div$ 25 kHz
AM band: 450 = 4.5 MHz $\div$ 10 kHz(500 = 4.5 MHz$\div$9 kHz) ( ): for European/Australian models

4. LPF circuitry applies the DC voltage to VCO circuitry which is converted from the output signal [25 kHz for FM, 10 kHz (9 kHz) for AM] of phase detector (internally IC401).

PLL CIRCUITRY BLOCK DIAGRAM

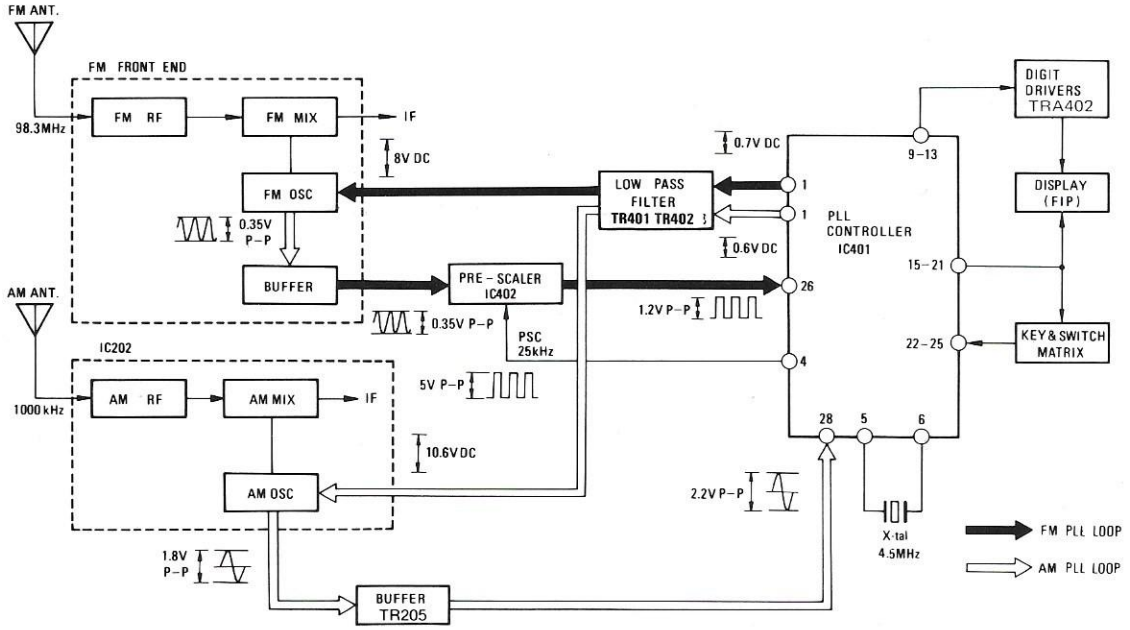

Figure 1

MICROPROCESSOR IC DESCRIPTION

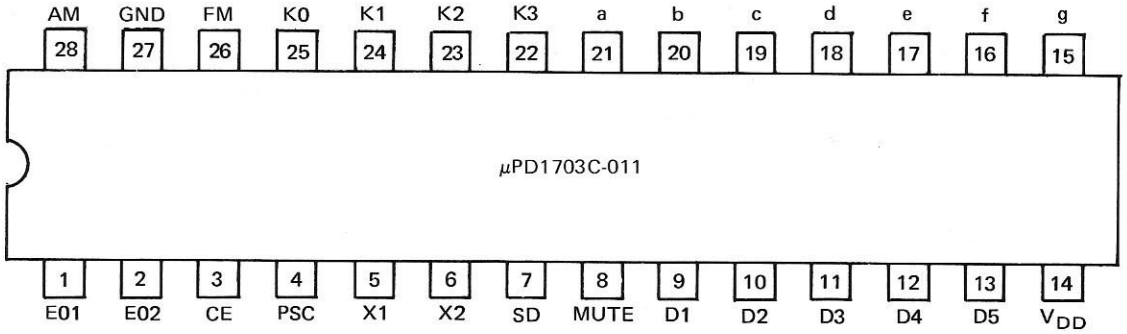

Figure 2

EXPLANATION OF INPUT AND OUTPUT TERMINALS

E01 E02	These three-state outputs are used (via active filters) to supply analog voltages to the tuner vari-cap for controlling the local oscillators.
CE	This input is used to designate the stand-by mode to the chip. It is low to designate the stand-by mode. (PLL: disable, display: off, clock generator: stop)
PSC	This output is used to control the division ratio of the FM two-modulus pre-scaler (μPB553AC).
X1, X2	These inputs are for connection to a 4.5 MHz crystal.
SD	This input is used to control the station searching operation (AU/AD). It is high to indicate the presence of a station and the operation is terminated.
MUTE	This output line is high to mute the radio in the case of station change, band change, and so on.
D1 to D5	These outputs are used as digit drivers for the display. (Active low)
V_{DD}	This is a 4.5 to 5.5 volt supply for the chip.
a to g	These outputs are p-ch open drain used as segment drivers for the display. They are also used as vertical drive for the control key and mode switch matrix.
K0 to K3	These inputs are from seven by four matrix. Various functions are entered through the matrix. See Fig. 3 for the matrix assignments.
FM	This is the FM band local oscillator input. The frequency is divided by 16/17 using a two-modulus pre-scaler (μPB553AC).
GND	System ground.
AM	This is the AM band local oscillator input.

CONTROL KEY AND MODE SWITCH MATRIX

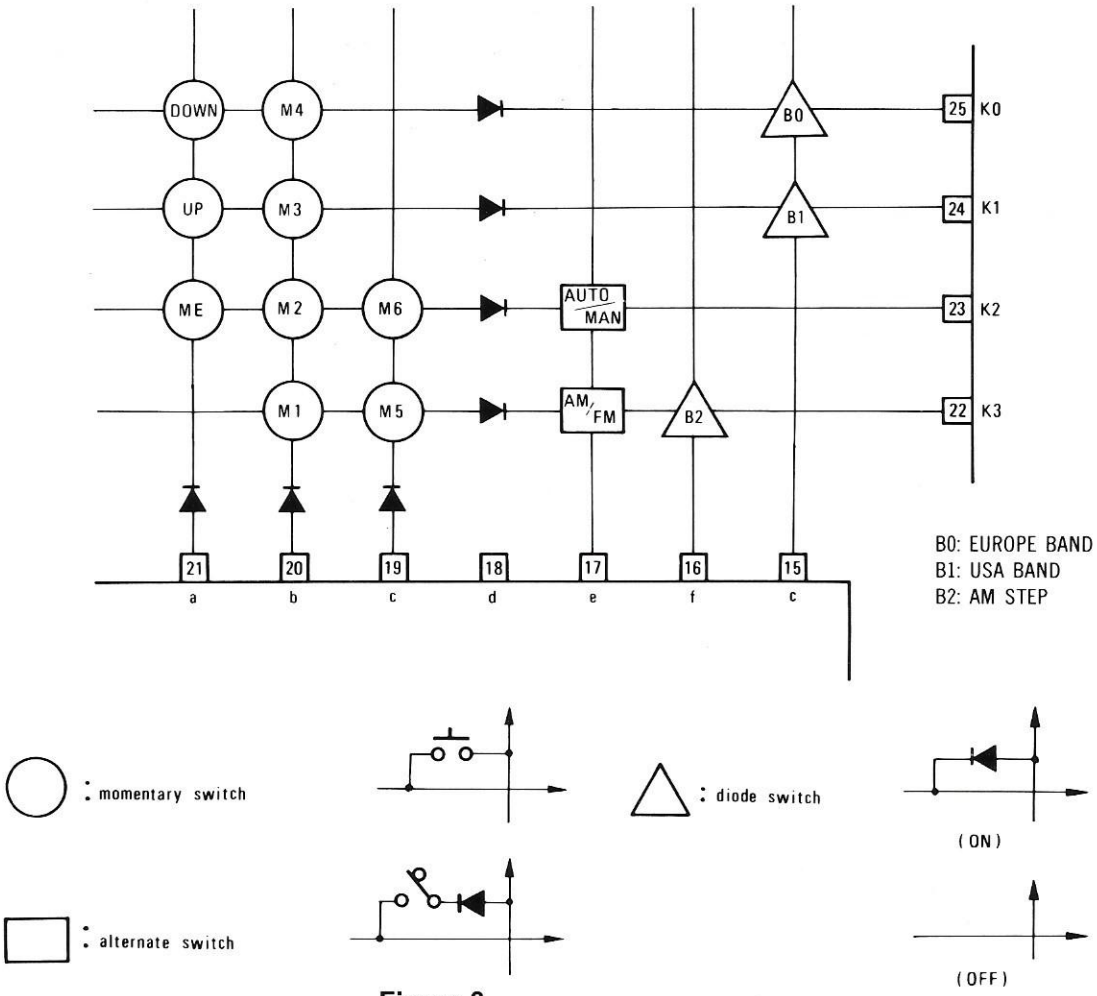

Figure 3

Searching for stations

UP, DOWN

* AUTO/MANUAL switch: ON (SEEK)
A momentary depression causes automatic up or down searching by the speed of 80 ms/ch until SD terminal is activated (active high) or any key is pressed.

* AUTO/MANUAL switch: OFF (Manual searching)
A momentary depression will tune to next channel, and continuous depression more than 0.5 second allows traversing up or down the entire band by the speed of 80 ms until the key is released.

Presetting stations

ME — The tuning information is stored into internal RAM by pressing ME key and then desired memory key within 5 seconds from the time ME key was initially pressed. If no key is pressed during this 5 sec. period, the ME function is cancelled.

M1 to M6 — Six favorite stations can be recalled from internal RAM for each band. When it is switched from one band to the other band, it will tune to the "last-tuned-to station" on that band. Each time a station is changed, the controller provides a signal to mute the tuner.

AM/FM PLL CIRCUIT OPERATION CHECK

Refer to PLL CIRCUITRY BLOCK DIAGRAM on page 8.

START

CONNECTION 1

Connect the frequency counter to C415 or C416 on synthesizer board.
(Refer to Figure a.)

STEP 1

Check the reference frequency.

1. Check the crystal (4.5 MHz).
2. Check/replace C415 or C416.
3. Check IC401.

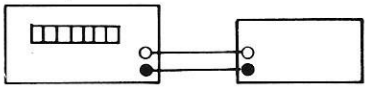

FREQUENCY COUNTER SYNTHESIZER BOARD

Figure a

OK? — NG → REPAIR

Frequency does not fall within 4.5 MHz.

OK

Frequency falls within 4.5 MHz.

CONNECTION 2

1. AM Mode: Connect the frequency counter to C262 on tuner board.
2. FM Mode: Connect the frequency counter to C409 on synthesizer board.

Figure b1

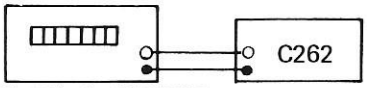

FREQUENCY COUNTER TUNER BOARD

Figure b2

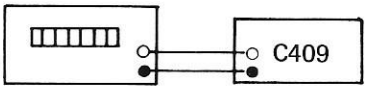

FREQUENCY COUNTER SYNTHESIZER BOARD

STEP 2

Check the VCO frequency.
(Display at 1620 kHz for AM and 107.9 MHz for FM and with no signal).

OK? — NG → REPAIR

Check the PLL circuit.

VCO frequency is not 2070 kHz for AM and 118.6 MHz for FM.

OK

VCO frequency is 2070 kHz for AM and 118.6 MHz for FM.

CONNECTION 3

AM: Connect DC voltmeter to R233 on tuner board.
FM: Connect DC voltmeter to R233 on tuner board.

Figure c1

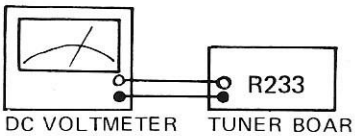

DC VOLTMETER TUNER BOARD

Figure c2

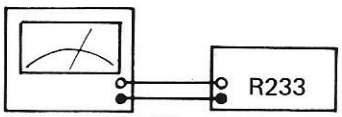

DC VOLTMETER TUNER BOARD

STEP 3

Check the VCO voltage.
(Display at 1620 kHz for AM and 107.9 MHz for FM)

1. Readjust for FM alignment on page 17.
2. Check PLL circuit.

OK? — NG → REPAIR

DC voltage is not 21.6 V ± 1 V for AM and 20.6 V ± 1 V for FM.

OK

DC voltage is 21.6 V ± 1 V for AM and 20.6 V ± 1 V for FM.

CONNECTION 4

With FM mode, connect frequency counter to PIN 5 on pre-scaler IC402.

Figure d

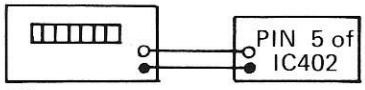

FREQUENCY COUNTER SYNTHESIZER BOARD

STEP 4

With 107.9 MHz frequency, check the pre-scaler frequency.

OK? — NG → REPAIR

Check the pre-scaler circuit.

Pre-scaler frequency is not 7.4125 MHz.

OK

Pre-scaler frequency is 7.4125 MHz.

END

AUTO STOP CIRCUIT FOR AUTO TUNING

The automatic stop circuit is shown as Figure 4.

1. In FM mode:
   When receiving an FM station, the IF signal from CF 203 is applied to Pin 1 of IC201.
   Input signal level: FM MUTE level = 15 μV
   Pin 12 of IC201 will become low (from 3 V to 0 V) and TR202 will be turned off. Under this condition, the high level (from 0 V to 5 V) is provided to Pin 7 of IC401. This causes that auto tuning mode in the microprocessor to stop.
2. In AM Mode
   When receiving an AM station, meter signal from pin 15 of IC202 is applied to pin 8 of IC403. If input level is more than 500 μV, Pin 2 potential of IC403 will become low and Pin 5 potential of TRA402 will become high. Under this condition, a high level is provided to Pin 7 of IC401 through D406. This stops the auto tuning mode from the microprocessor.

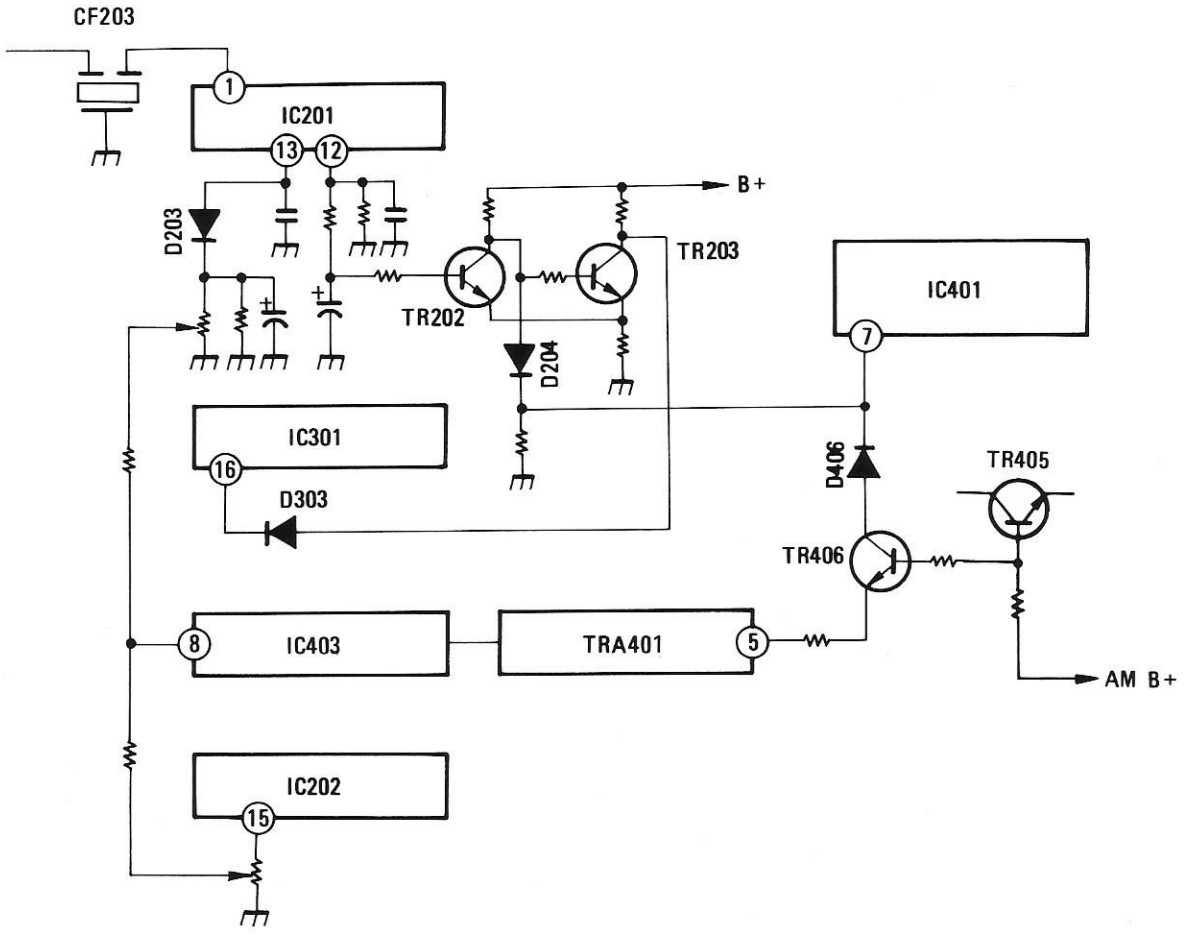

Figure 4 AUTO STOP CIRCUIT

MICROPROCESSOR CIRCUITRY

The control circuit uses a 4-bit microprocessor, μPD1703C which is C-MOS and can be used with a power supply voltage of 5 volts.

KEYBOARD ENTRY

The MPU generates 3 kinds of timing pulses, labeled Sa, Sb and Sc to search the Keyboard. These outputs appear at Pins 19, 20 and 21 respectively and are transferred to Input Pins 22, 23, 24 and 25 by the Keyboard Matrix. The MPU determines which key is pressed by input timing and 4 input combinations as illustrated below.

KEY	UP	DOWN	MEMORY SET	MEMORY					
				1	2	3	4	5	6
K3 Pin 22	Off	Off	Off	On	Off	Off	Off	On	Off
K2 Pin 23	Off	Off	On	Off	On	Off	Off	Off	On
K1 Pin 24	On	Off	Off	Off	Off	On	Off	Off	Off
K0 Pin 25	Off	On	Off	Off	Off	Off	On	Off	Off
Input pin Output pin	Sa Pin 21	Sa Pin 21	Sa Pin 21	Sb Pin 20	Sb Pin 20	Sb Pin 20	Sb Pin 20	Sc Pin 19	Sc Pin 19

MODE SWITCH

Mode switch consists of D410 and D411.

MODE	AM	FM	SEARCH
K3 pin 22	On	Off	Off
K2 Pin 23	Off	Off	On
K1 Pin 24	Off	Off	Off
K0 Pin 25	Off	Off	Off
Input pin Output pin	Se Pin 17	Se Pin 17	Se Pin 17

SELECTION OF THE RADIO BAND

	AM		FM	
MODE SW MATRIX	10 kHz step	9 kHz step	US BAND (200 kHz step)	Europe BAND (50 kHz step)
K3 Pin 22	On	Off	Off	Off
K2 Pin 23	Off	Off	Off	Off
K1 Pin 24	Off	Off	On	Off
K0 Pin 25	Off	Off	Off	On
Input pin Output pin	Sf Pin 16	Sf Pin 16	Sg Pin 15	Sg Pin 15

VCO VS FM BAND FREQUENCY CURVE

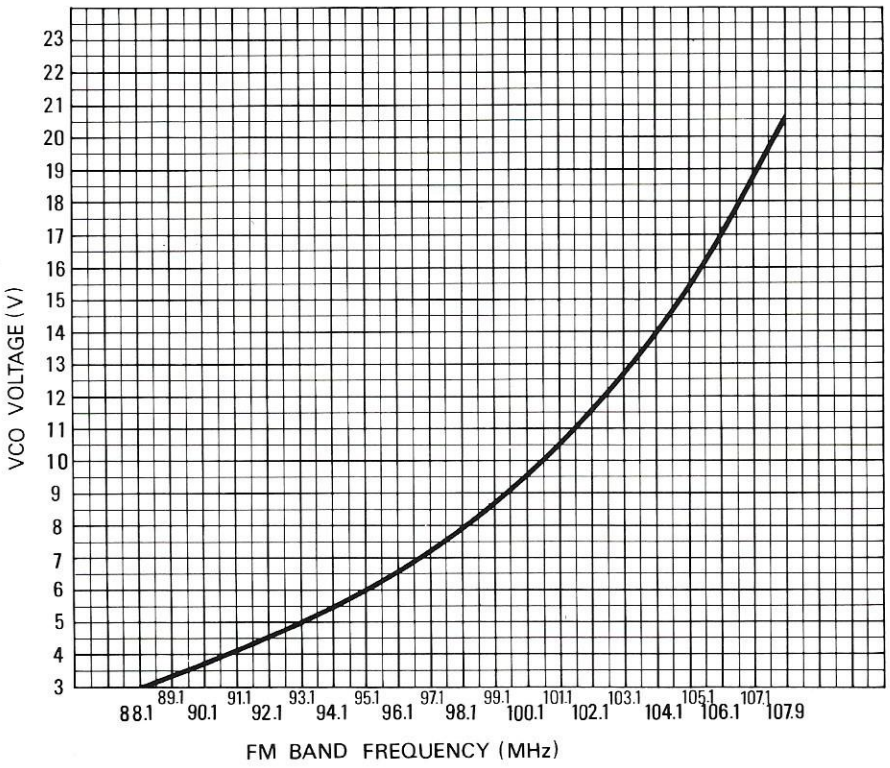

VCO VS AM BAND FREQUENCY CURVE

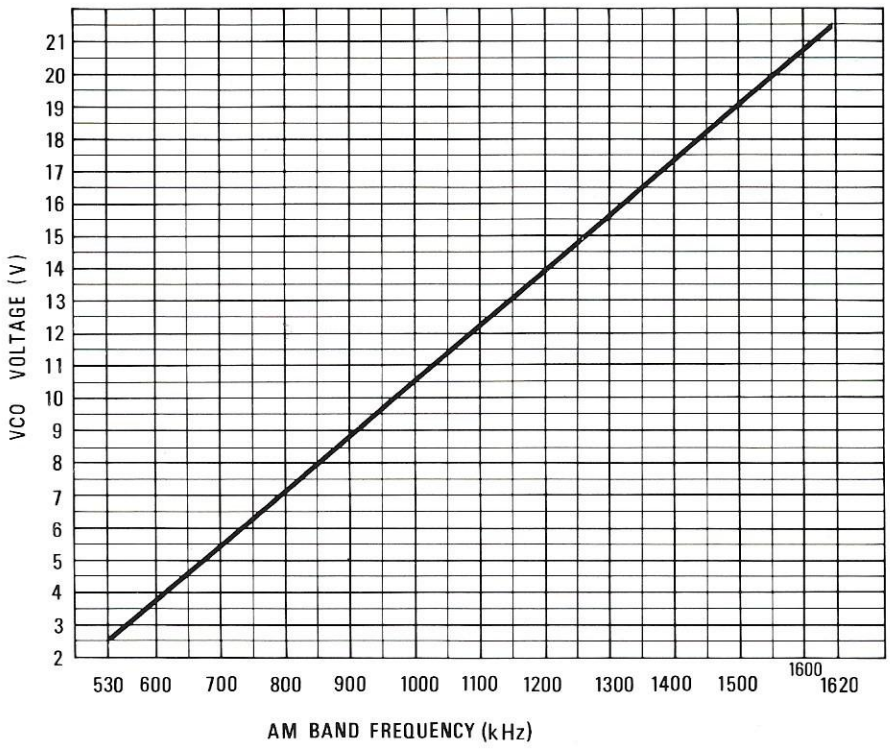

LEVEL DIAGRAM

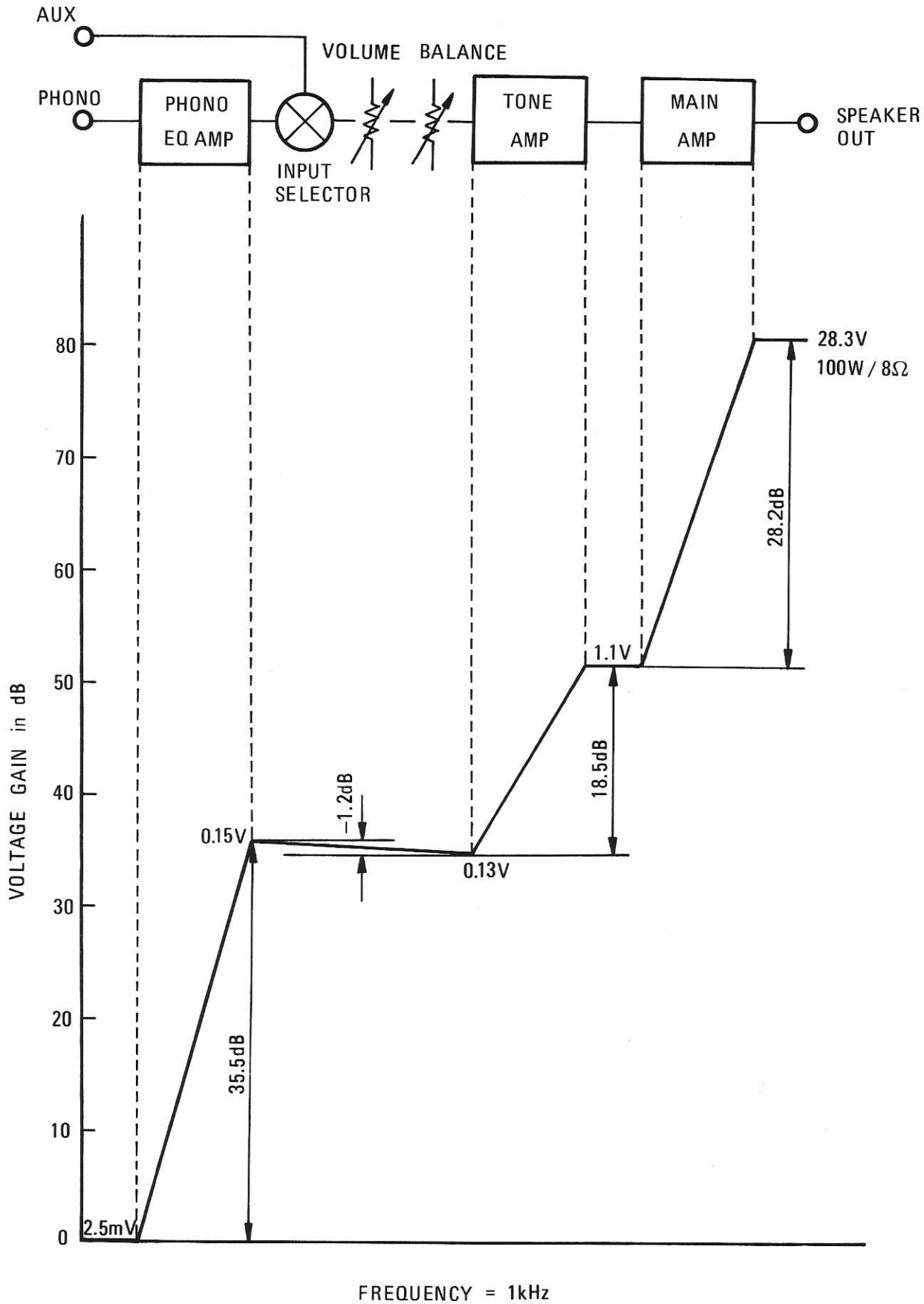

FREQUENCY = 1kHz

ALIGNMENT PROCEDURES

Do not attempt alignment unless the following equipment is available.

1. AM signal generator
2. Oscilloscope
3. AC voltmeter
4. FM signal generator
5. Stereo modulator
6. Audio generator
7. Distortion meter
8. DC voltmeter
9. Frequency counter

Note: Remove line cord antenna from FM external antenna terminal when aligning.

AM IF AND RF ALIGNMENT

Refer to alignment and check points photo on page 19.

Output of signal generator should be no higher than necessary to obtain an output reading.
Signal generator modulation: 30%
Press AM switch.

STEP	SIGNAL GENERATOR COUPLING	SIGNAL GENERATOR FREQUENCY	RECEIVER FREQUENCY DISPLAY	INDICATOR	ADJUSTMENT Refer Figure 8	REMARKS
1	Refer Figure 5	450 kHz (400 Hz, Mod.)	Point of non-interference (on/about 600 kHz)	AC voltmeter to TAPE OUT jack	T203 (IFT)	Adjust for maximum reading
2	Same as step 1	600 kHz (400 Hz, Mod.)	600 kHz	Same as step 1	L251 (ANT coil)	Same as step 1
3	Same as step 1	1400 kHz (400 Hz, Mod.)	1400 kHz	Same as step 1	TC201 (ANT trimmer)	Same as step 1
4	Same as step 1	1000 kHz (400 Hz, Mod.)	1000 kHz	SIGNAL ind. LED	VR203	Adjust for 4th signal indication on receiver's meter with input of 2.5 mV/m

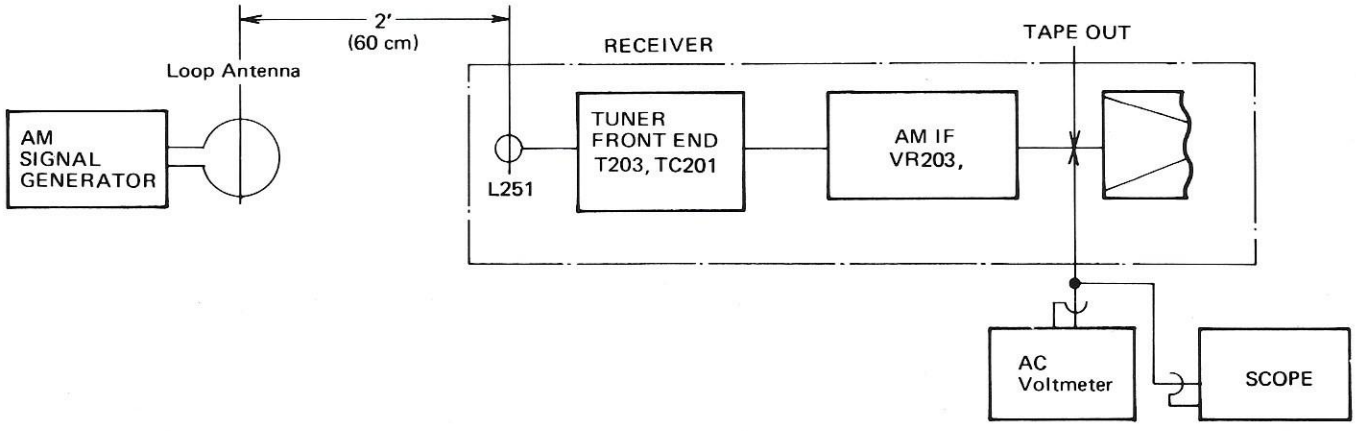

Figure 5 AM ALIGNMENT CONNECTION

FM RF AND IF ALIGNMENT

Signal generator output should be no higher than necessary to obtain an output reading.
Press FM switch.
Signal generator deviation: 75 kHz NOTE: Be sure to disconnect FM line cord antenna during alignment.

STEP	SIGNAL GENERATOR COUPLING	SIGNAL GENERATOR FREQUENCY	RECEIVER FREQUENCY DISPLAY	INDICATOR	ADJUSTMENT Refer Figure 8	REMARKS
1	Connect to FM antenna terminal through FM dummy antenna (300Ω) Figure 6	90.1 MHz (400 Hz, Mod.)	98.1 MHz	DC voltmeter connected to Pins 3 and 4	T201	Adjust for zero reading on DC voltmeter
2	Same as step 1	98.1 MHz (400 Hz, Mod.)	98.1 MHz	Distortion meter connected to TAPE OUT jack	T202	Adjust for minimum distortion
3	Same as step 1 (Press FM MUTE switch)	98.1 MHz (400 Hz, Mod.)	98.1 MHz	Same as step 1	VR201	Adjust for zero reading on AC voltmeter with SG output level of 15 μV
4	Same as step 1	98.1 MHz (400 Hz, Mod.)	98.1 MHz	SIGNAL STRENGTH indicator LED	VR202	Adjust for full signal indication on receiver's meter with input of 150 μV

Note: Remove line cord antenna from FM external antenna terminal when aligning.
For European models, the lowest frequency of FM tuning range should not be below 87.5 MHz.

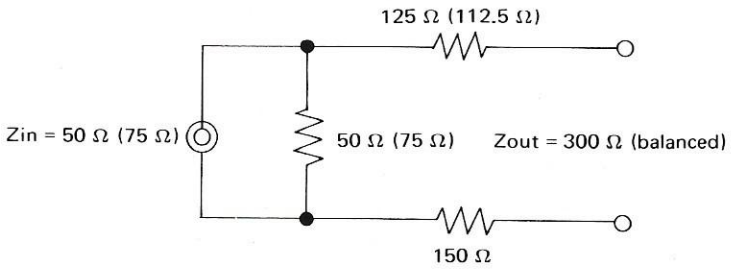

FM Dummy Antenna to 300 Ω antenna terminal of Receiver

Figure 6 FM DUMMY ANTENNA

MPX ALIGNMENT

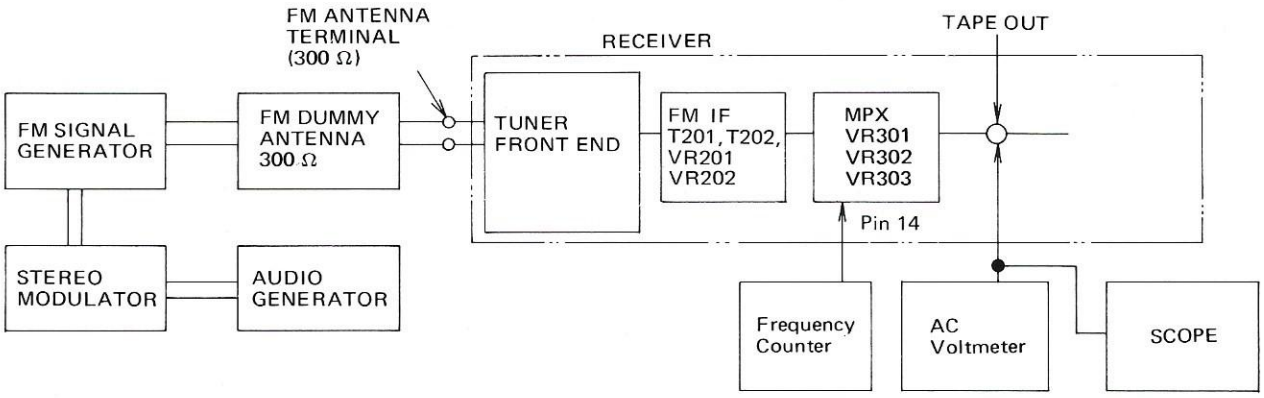

Figure 7 FM RF, IF and MPX ALIGNMENT CONNECTION

Press FM switch.
Tune for 98.1 MHz on band.
Signal generator output level: 1000 μV Deviation: 75 kHz, at 100% modulation of composite signal.
Connect signal generator to FM antenna terminal through FM dummy antenna (300 Ω).

STEP	19 kHz (PILOT SIGNAL) MODULATION Level	SIGNAL GENERATOR Freq. Set to	OUTPUT INDICATOR Connected to	ADJUST Refer Figure 8	ADJUST FOR	REMARKS
1	PILOT OFF	Carrier only	Frequency counter connect to TP (Pin 14) of PCB 0101 and ground	VR303	19 kHz	———
2	8%	Composite 1 kHz R channel	AC voltmeter to TAPE OUT jack of R channel	———	———	Adjust input for audio output of about 440 mV.
3	8%	Composite 1 kHz L channel	AC voltmeter to TAPE OUT jack of R channel	VR302	Minimum	AC voltmeter reading should be at least 33 dB below reading in step 2.
4	8%	Composite 1 kHz R channel	AC voltmeter to TAPE OUT jack of L channel	VR302	Minimum	Same as step 3.
5	8%	Same as step 4 modulation level = 0	Same as step 4	VR301	Minimum	AC voltmeter reading should be at least 33 dB below reading in step 2.

If you did not obtain –33 dB readings in steps 3 and 4 (compared with step 2), readjust VR302 until you obtain –33 dB reading for both steps 3 and 4. (nominal 50 dB)

ALIGNMENT & CHECK POINTS

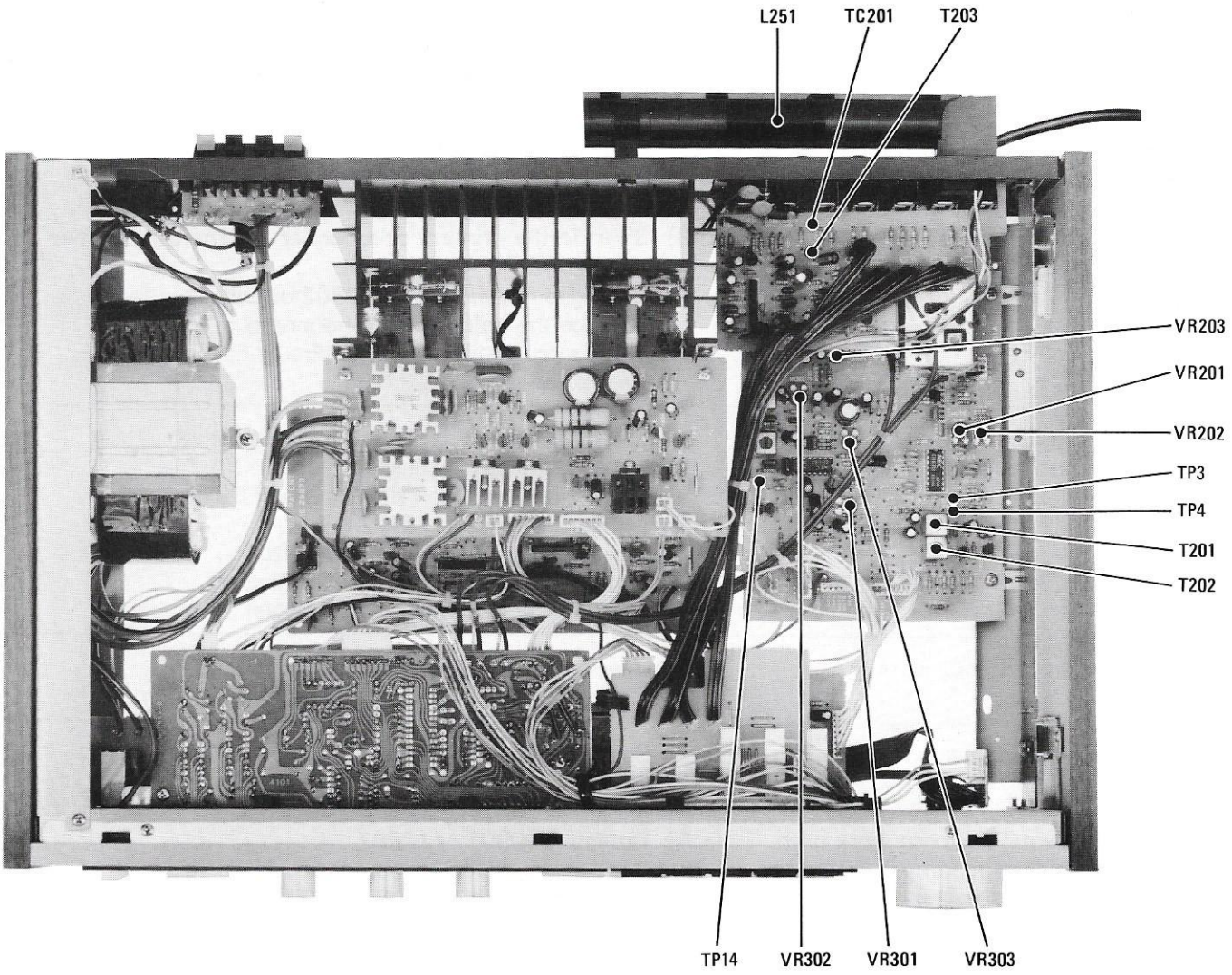

Figure 8

TROUBLESHOOTING

SYMPTOM	CAUSE AND REMEDY
1. Receiver not operative; POWER indicator does not light	A) Faulty AC power cord Replace B) Defect in the power switch SW1 Replace C) Broken wire in the power transformer Replace the transformer D) Blown power fuse F801 Replace the fuse
2. Fuse blows when power is turned on	A) Power transformer T851 defective Replace B) Short in the primary or secondary of the transformer circuitry C) Damaged rectifier D801, D802 or D803 Replace the defective component(s) D) Short circuit in the rectifier circuit Repair the short
3. Power indicator lights but no sound from both channels	A) SPEAKERS switch SW2 or SW3 defective Replace the defective switch(es) B) Defect in transistor TR610a, b or TR611a, b of Main Amp Board 6122A Replace the defective component(s) C) IC IC603 or Relay RL601 defective Replace the defective component(s)
4. A speakers do not work	Speaker switch SW2 defective Replace
5. B Speakers do not work	Speaker switch SW3 defective Replace
6. One channel does not work with VOLUME at maximum with a test signal applied to the center terminal of VOLUME control VR901 of the dead channel	A) Defective IC901 or IC902 Replace the defective component(s) B) Defect in transistor TR601 – TR613 of Main Amp Board 6122 Locate and correct the defect C) Break in copper foil of printed circuit board 6122A Repair or replace D) Short in speaker output terminal Repair the short E) Defective resistor R906, R601 Replace the defective resistor(s) F) Defective capacitor C901, C904 or C601 Replace the defective capacitor(s)

SYMPTOM	CAUSE AND REMEDY
7. Same as 6 but channel operates when test signal is applied as 6	A) Defective IC501 or IC502 Replace the defective IC B) Defective resistor R501, R507, R513 or R514 Replace the defective resistor(s) C) Defective capacitor C503, C507, C510 or C514 Replace the defective capacitor(s) D) Defective INPUT selector switch SW12 or SW13 Repair or replace the switch
8. Speaker works normally but headphones do not work	A) Headphone plug does not mate with jack Replace the plug B) Defective resistor R641 Replace
9. All the inputs work normally except AUX input	A) Poor contact in AUX input jack Repair or replace the jack B) Defective AUX switch SW14 Repair or replace the switch
10. PHONO 1 (PHONO 2) input not operative	A) Poor contact in PHONO input jack Repair or replace the jack B) Defective PHONO SW12 (SW13) Repair or replace the switch
11. TAPE OUT 1 (TAPE OUT 2) has no effect	A) Defective contact in TAPE OUT 1 (TAPE OUT 2) jack Repair or replace the jack B) Defective contact in TAPE MON switch SW17 (SW18) Repair or replace
12. FM does not operate	A) Defective front end Replace B) Defective FM switch SW15 Replace the switch C) Defective transistor TR201, TR301, TR302 or IC201, IC301 Replace the defective transistor(s) or IC(s) D) Defective coil T201 – T202 Replace the coil(s) E) Defective lead-in Repair or replace the lead in F) Ceramic filter CF201 – CF203 defective Replace the defective ceramic filter(s) G) Defective pre-scaler circuit component Replace H) Defective controller circuit component Replace

SYMPTOM	CAUSE AND REMEDY
13. Poor multiplex separation	A) Improper adjustment Readjust VR302 and VR303 (Refer to MPX ALIGNMENT on page 18) B) IC301 defective Replace C) Variable resistor VR302 or VR303 defective Replace the variable resistor(s)
14. STEREO indicator LED does not light	A) Defective indicator LED in FIP Replace B) Improper adjustment of VR303 of tuner board 0101A Make readjustment (Refer to MPX ALIGNMENT on page 18) C) Defective IC301 or resistor R316 Replace the defective component(s)
15. FM volume not sufficient	A) If volume of both L and R channels not enough: Front end section defective, or faulty IC201, coil T201, T202 or defective capacitor C209 of tuner board Locate and replace the defective component(s) B) If sound of one channel not enough: Defective LPF301 or LPF302 Replace
16. FM MUTE has no effect	A) Defective FM MUTE switch SW10 B) Defective IC201, TR202, TR203, TR301, TR302, D201, D303, D305 or D306 Replace the defective component(s)
17. AM does not operate	A) Damaged IC202 of tuner board 0101A Replace B) Defective L201, T203, CF204 or T204 of tuner board 0101A Replace the defective component(s) C) Resistor R251, R252, R260, R261, R263 or R264 defective Replace the defective resistor(s) D) Capacitor C251, C255, C256, C257, C260, C264 or C272 defective Replace the defective capacitor(s) E) Defective AM switch SW16 Replace F) Defective vari cap diode D210a,b Replace vari cap diode(s) G) Damaged AM bar antenna Repair or replace

SYMPTOM	CAUSE AND REMEDY
17. AM does not operate (continued)	H) Defective controller circuit component Replace
18. LOUDNESS has no effect	A) Defective LOUDNESS switch SW7 Replace B) Defective capacitor C916, C917 or resistor R916 Replace the defective component(s) C) Defective VOLUME control VR901 Replace
19. MONO not effective	A) Defective MONO switch SW8 Replace
20. TAPE 1 (TAPE 2) not effective	A) Defective TAPE 1 (TAPE 2) switch SW17 (SW18) Replace B) Poor contact in TAPE 1 IN (TAPE 2 IN) jack Repair or replace jack(s) C) Resistor R711 (R713) defective Replace the defective resistor(s)
21. TAPE DUB not effective	A) Defective DUB switch SW19 or SW20 Replace
22. BASS control has no effect	A) Variable resistor VR905 defective Replace B) Defective C910, C911 R910, R911 or R912 Replace the defective component(s)
23. MID control has no effect	A) Variable resistor VR904 defective Replace B) Defective C908, C909, R907, R908 or R909 Replace the defective component(s)
24. TREBLE control has no effect	A) Variable resistor VR903 defective Replace B) Defective C906, C907, R904 or R905 Replace the defective component(s)
25. OUTPUT POWER METER does not work	A) Defective FIP FL401 Replace B) Defective OUTPUT POWER METER driver IC404 or IC405 Replace

SYMPTOM	CAUSE AND REMEDY
26. Excessive noise with PHONO input	A) Defective IC501 or IC502 Replace B) Defective C503, C507, C510, C514, R502, R504, R505, R506, R508, R510, R511 or R512 Replace the defective component(s)
27. SUB FILTER has no effect	A) Defective SUB FILTER switch SW5 Replace B) Defective capacitor C913 Replace
28. Noisy VOLUME control	A) Defective VR901 Replace B) Defective capacitor C507, C514 or C901 Replace the defective capacitor(s)
29. SIGNAL strength indicator LED not functioning	A) Defective LED in FIP Replace B) In case of FM reception, VR202, D203, R217, IC201 defective Replace the defective component(s) C) In case of AM reception, VR203, R265, IC202 defective Replace the defective component(s)
30. HIGH FILTER has no effect	A) Defective switch SW6 Replace B) Defective capacitor C918 Replace
31. MPX FILTER has no effect	A) Defective C316 or R320 Replace the defective component(s) B) Defective switch SW11 Replace
32. SEARCH tune does not operate (UP/DOWN) (AM or FM)	A) Poor contact in UP/DOWN key Repair or replace B) Defective SEARCH switch SW9 Replace C) Defective IC401 Replace D) Defective diode D204, D401, D402 or D406 Replace the defective diode(s) E) Defective transistor TR202, TR203 or TR205 Replace the defective transistor(s) F) Defective signal LED in FIP Replace

SYMPTOM	CAUSE AND REMEDY
32. SEARCH tune does not operate (UP/DOWN) (AM or FM) (continued)	G) Defective tuner circuit component Replace H) Defective TR401 or TR402 Replace I) In case of FM only, improper adjustment of FM Front end Replace
33. MANUAL tune does not operate (UP/DOWN) (AM or FM)	A) Poor contact in UP/DOWN key Replace B) Defective IC401 Replace C) Defective D402 Replace
34. MEMORY setting (keys 1 – 6) does not operate	A) Poor contact in memory keys 1 – 6 Replace B) Poor contact in MEMORY set key Replace C) Defective IC 401 or IC402 Replace the defective component(s) D) Defective diode D402, D403 or D404 Replace
35. FIP (Fluorescent indicator panel) does not work	A) FL401 defective Replace B) Defective TRA401 Replace C) Defective IC401 or IC402 Replace D) Defective resistor R401, R402 or R403 Replace E) Diode D409 defective Replace

Notes:

1. This receiver has two built-in overload thermal protection circuits in case of abnormal operation. When the temperature of the posister [one is installed with heat sink (TH601) and the other with power transformer (TH602)] rises abnormally the resistance of the posister becomes larger and pin 1 potential of IC604 will increase and cause the relay RL601 to turn off.

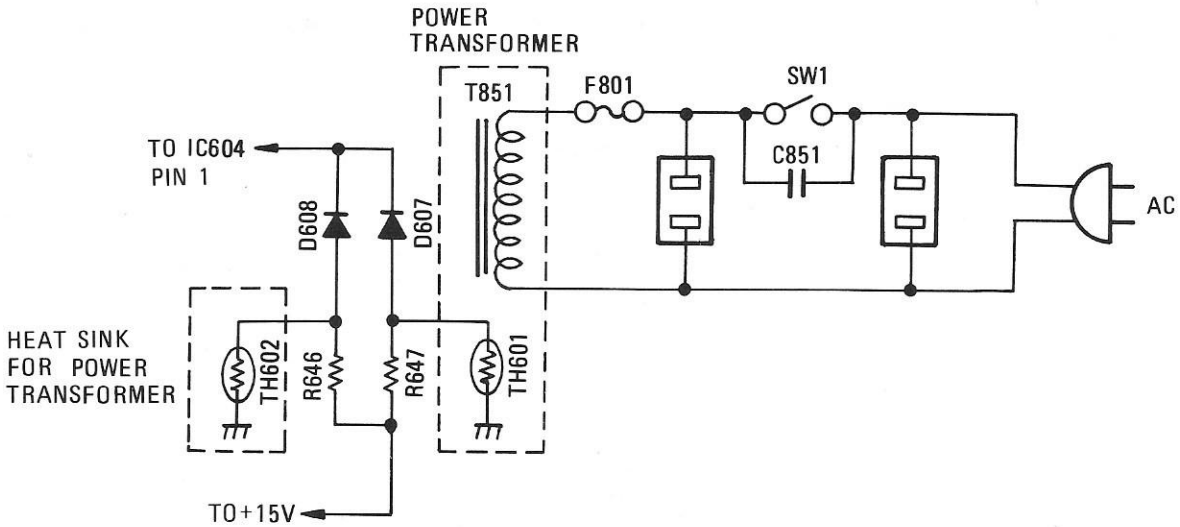

2. The relay RL601 protects the speakers when an abnormally high current flows in TR610a, b and TR611a, b due to excessive input drive, or if too low load impedance is connected across the output. If current increase is excessive, the voltage across R621a, c will turn on TR612a, b. Then pin 1 potential of IC604 will increase and cause the relay RL601 to turn off.
   Also relay RL601 protects the speakers when abnormally unbalanced DC voltage appears at the output. This voltage is added to pin 2 of IC604 and it will turn off relay RL601.

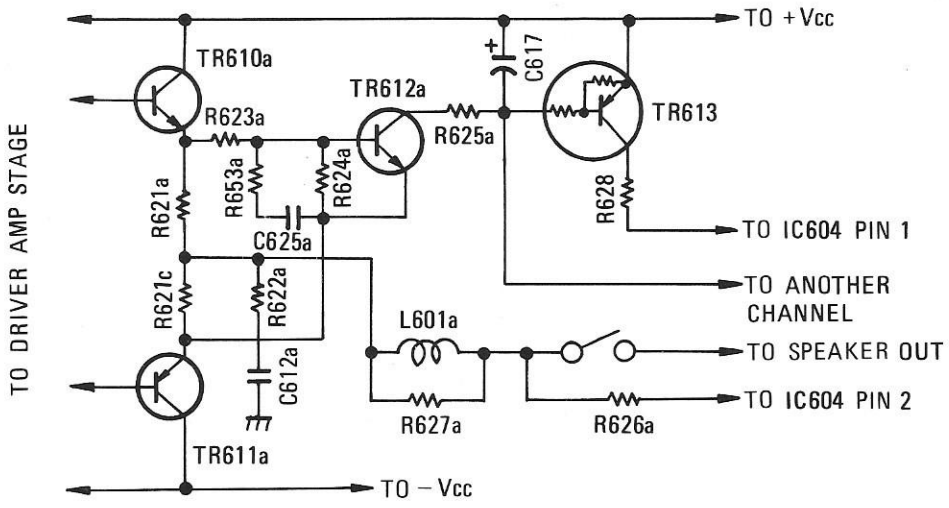

3. To suppress power turn on noise, a time delay is provided by time constant of R649 and C621. This time delay is set to activate the relay to connect the speakers after enough time has elapsed for the power amplifier and the preamplifier to reach a stable operating condition.

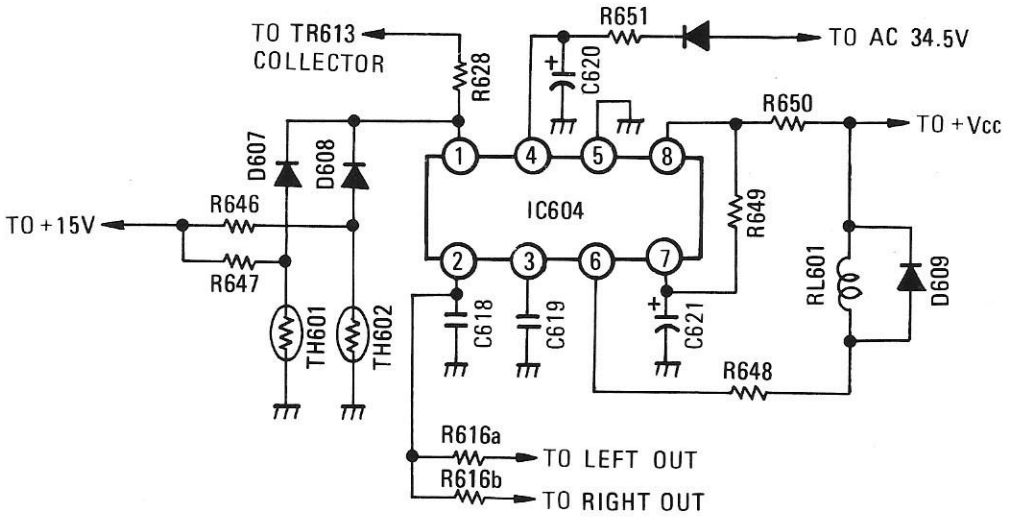

4. Impedance detector circuit (IC601 ~ IC603) protects the power amplifier and the power transformer when low load impedance is connected across the output. When the impedance is about 4 ohms and the output power becomes 1 ~ 2 watts, the output of the current detector amp (IC602) becomes larger than the output of the voltage detector amp (IC601) and then the DC voltage appears at pin 7 and/or pin 1 of IC603. This DC voltage will turn off thyristor D808 and turn on thyristors D809 and D810, resulting in the DC voltages supplied to the power amplifier changing to the lower one (the rectified outputs of D801) from the higher one (the rectified outputs of D802). This condition is held until the power switch is turned off. If the SPEAKERS A switch and the SPEAKERS B switch are pushed on at the same time, the impedance detector also acts.

P.C. BOARDS (TOP & BOTTOM VIEWS)

5127A EQUALIZER BOARD (TOP VIEW)

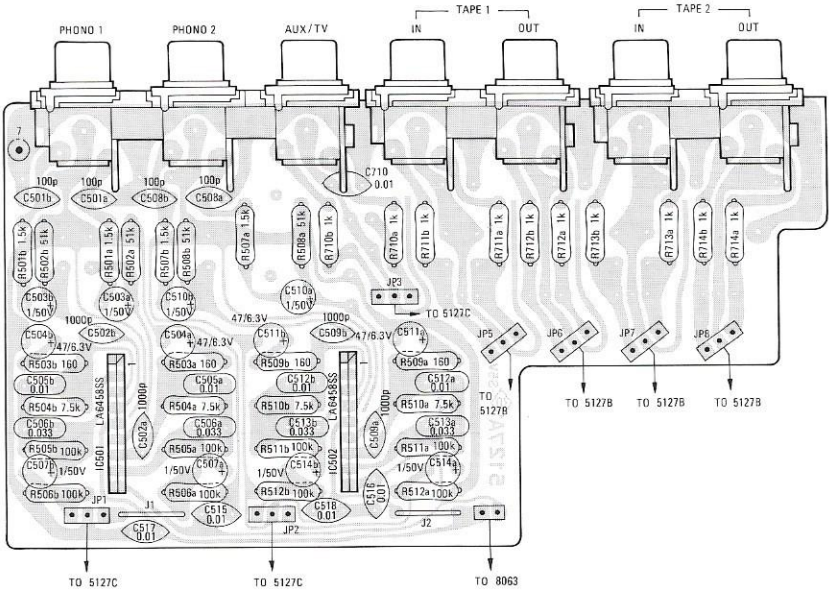

5127A EQUALIZER BOARD (BOTTOM VIEW)

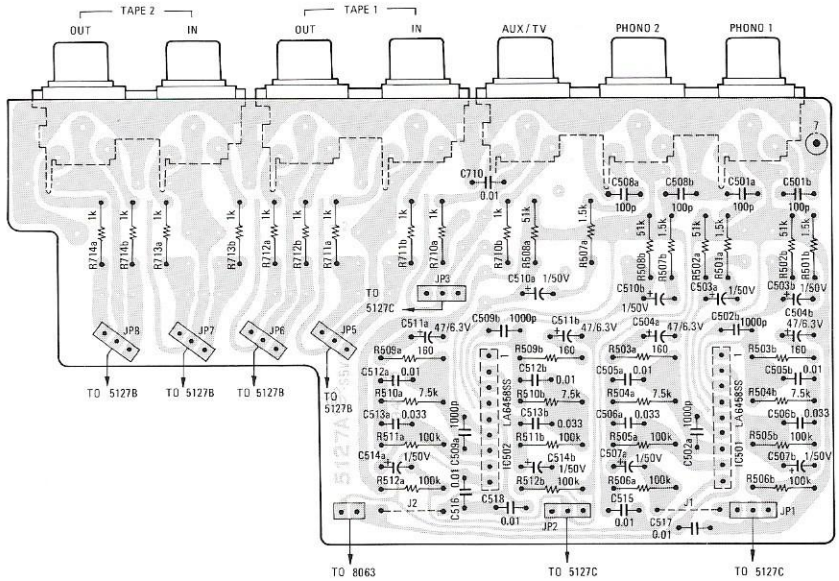

5127B SELECTOR SWICH BOARD (TOP VIEW)

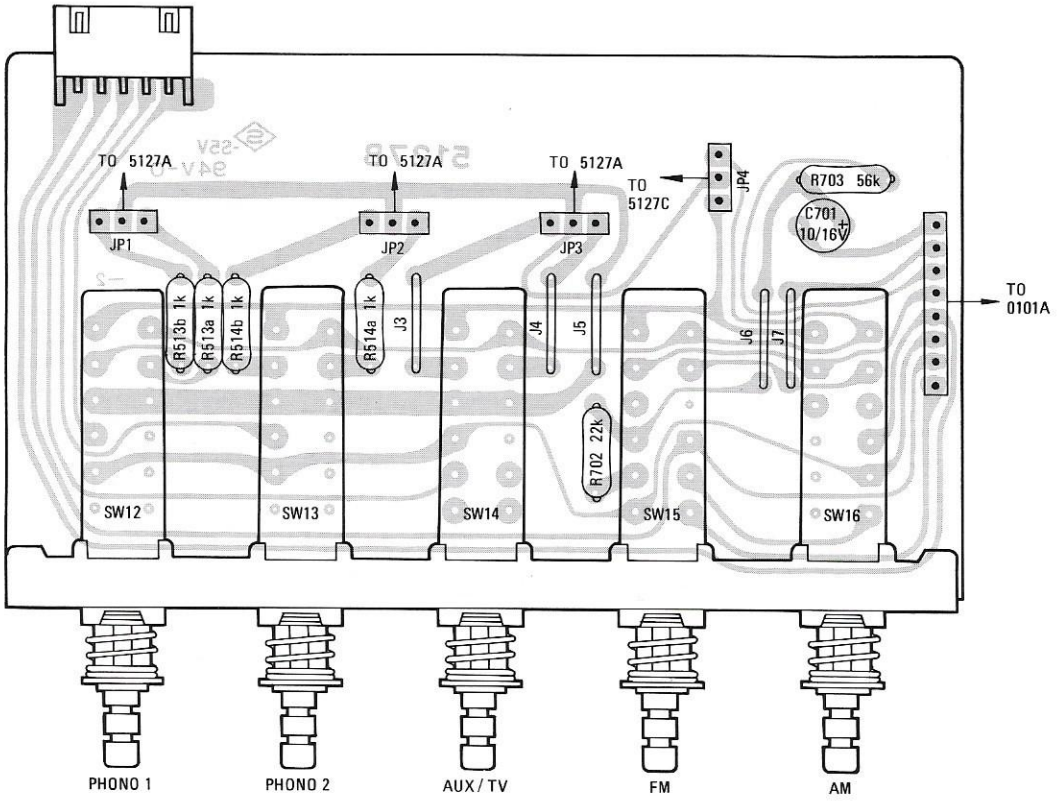

5127B SELECTOR SWITCH BOARD (BOTTOM VIEW)

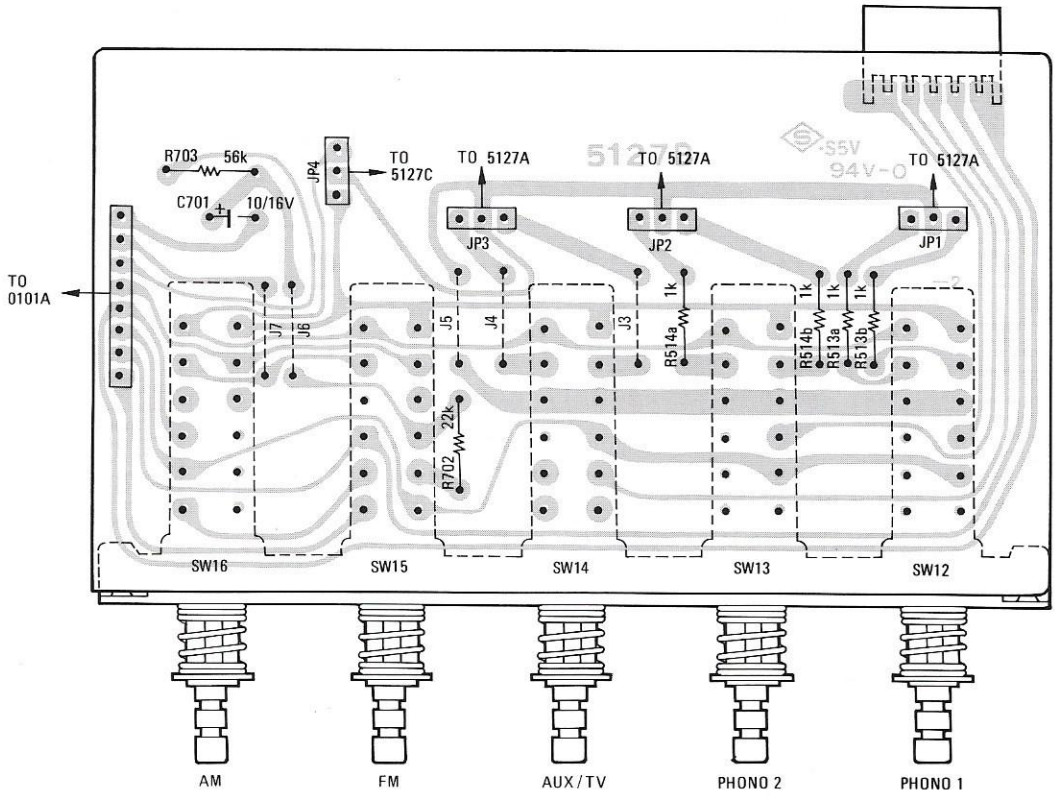

5127C TAPE SWITCH BOARD (TOP VIEW)

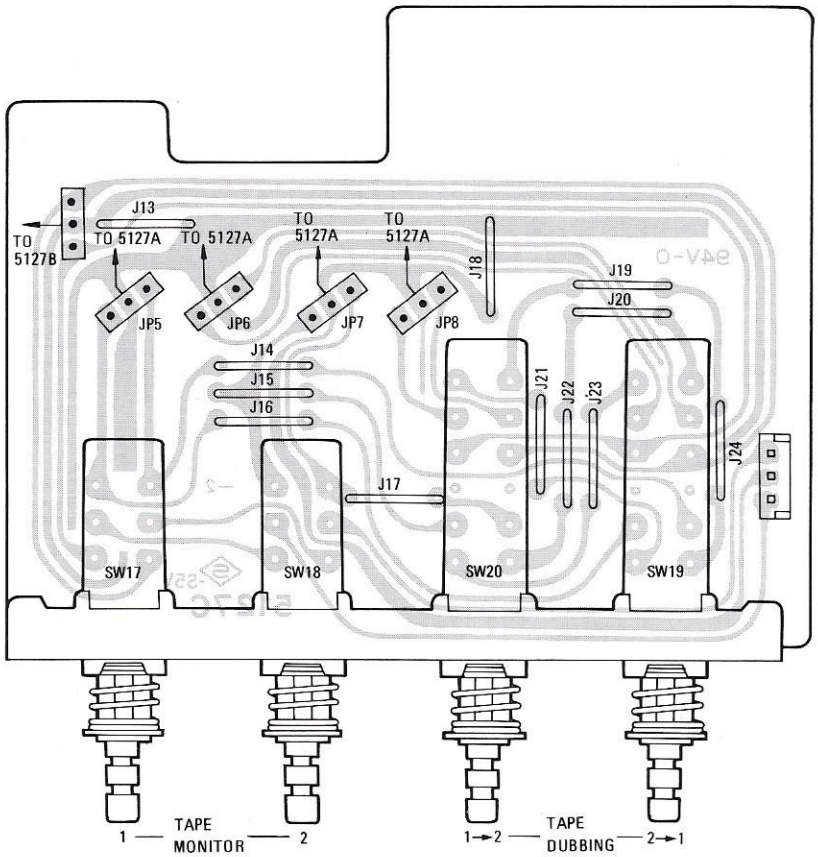

5127C TAPE SWITCH BOARD (BOTTOM VIEW)

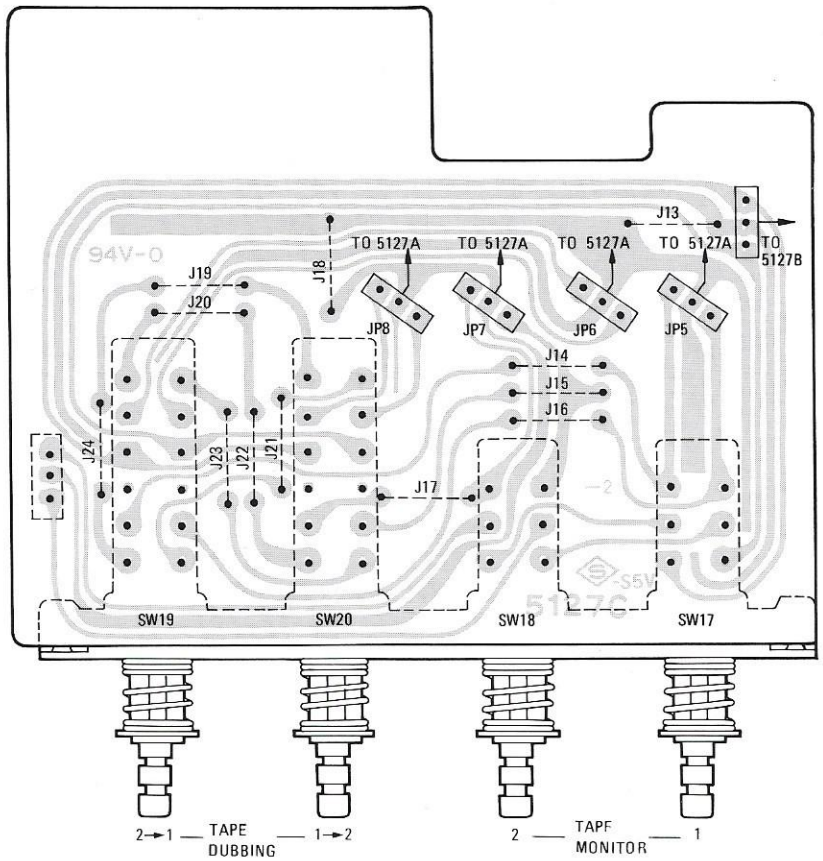

5127D SPEAKER SWITCH BOARD (TOP VIEW)

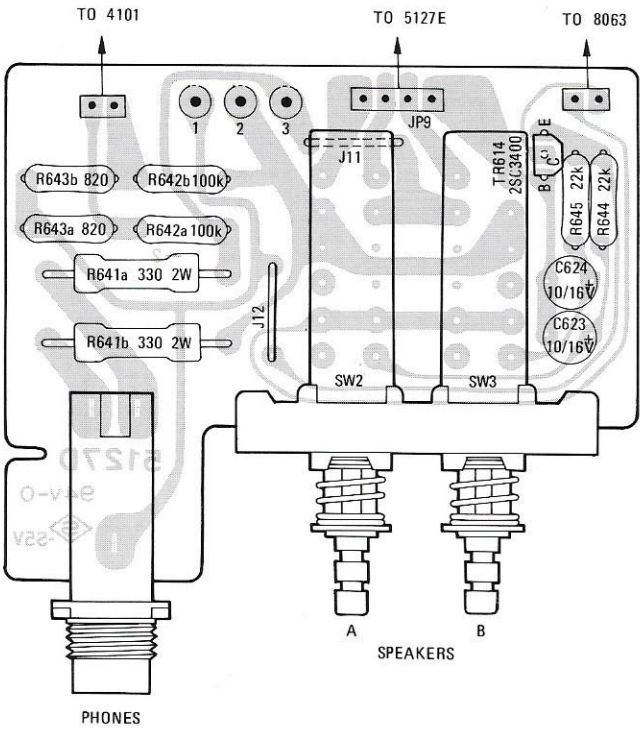

5127D SPEAKER SWITCH BOARD (BOTTOM VIEW)

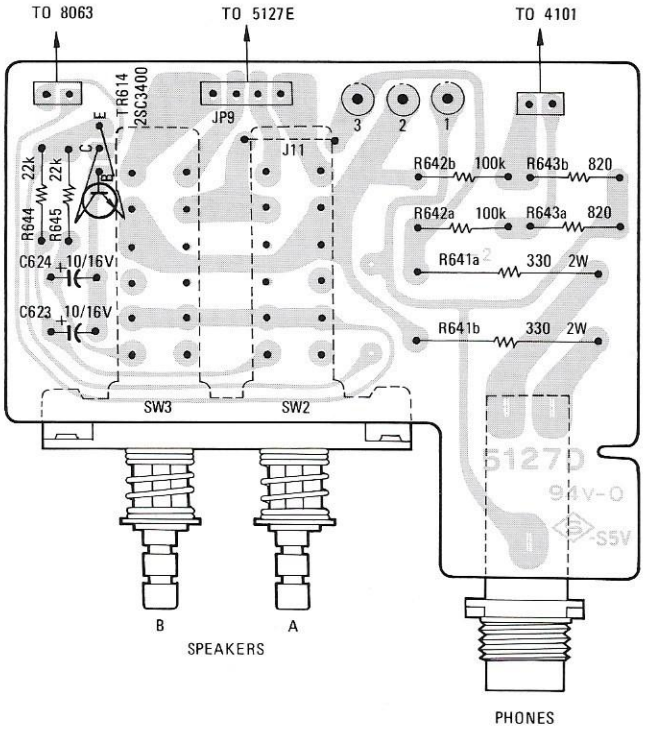

5127E SPEAKER TERMINAL BOARD (TOP VIEW)

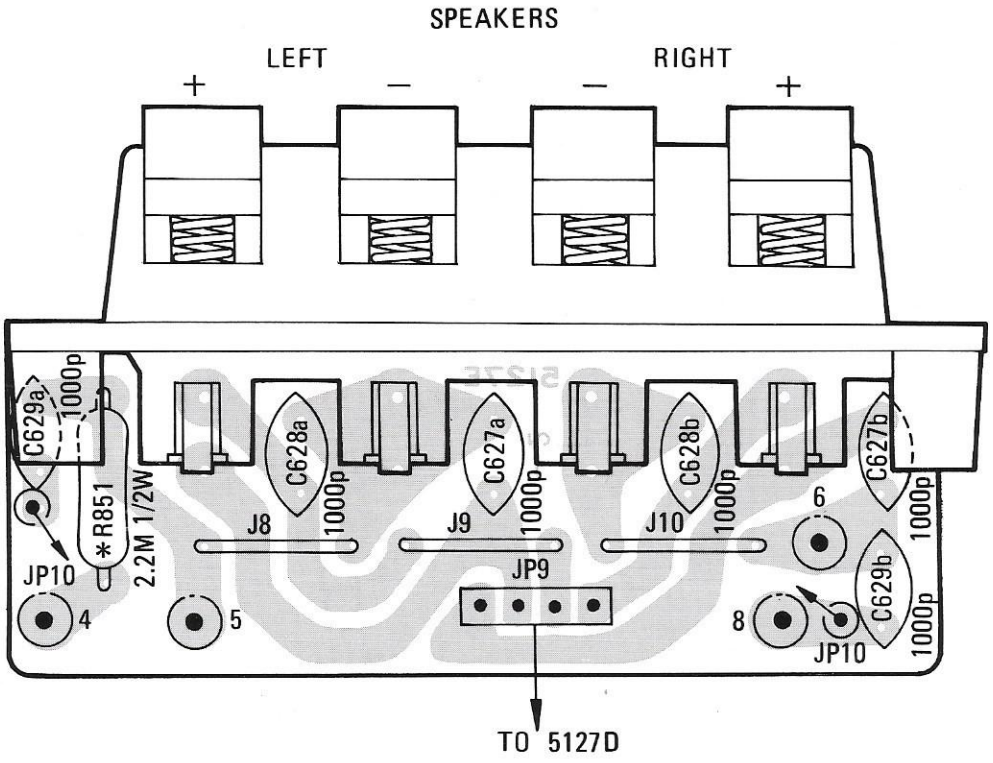

5127E SPEAKER TERMINAL BOARD (BOTTOM VIEW)

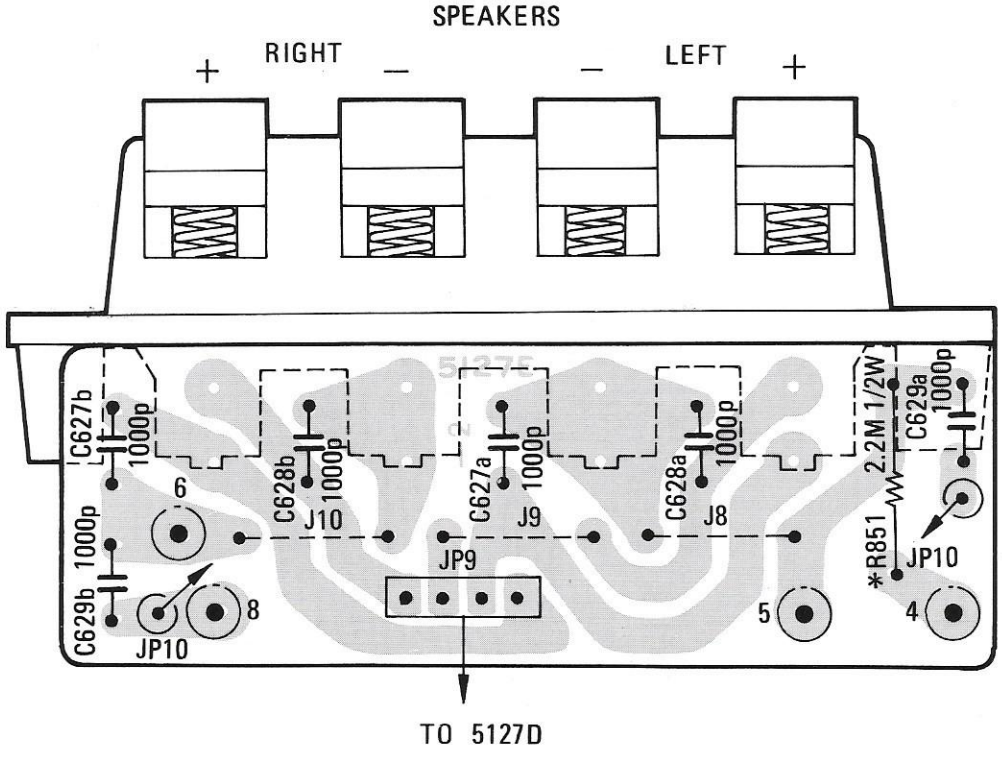

0101A,B TUNER & SEARCH SWITCH BOARD (BOTTOM VIEW)

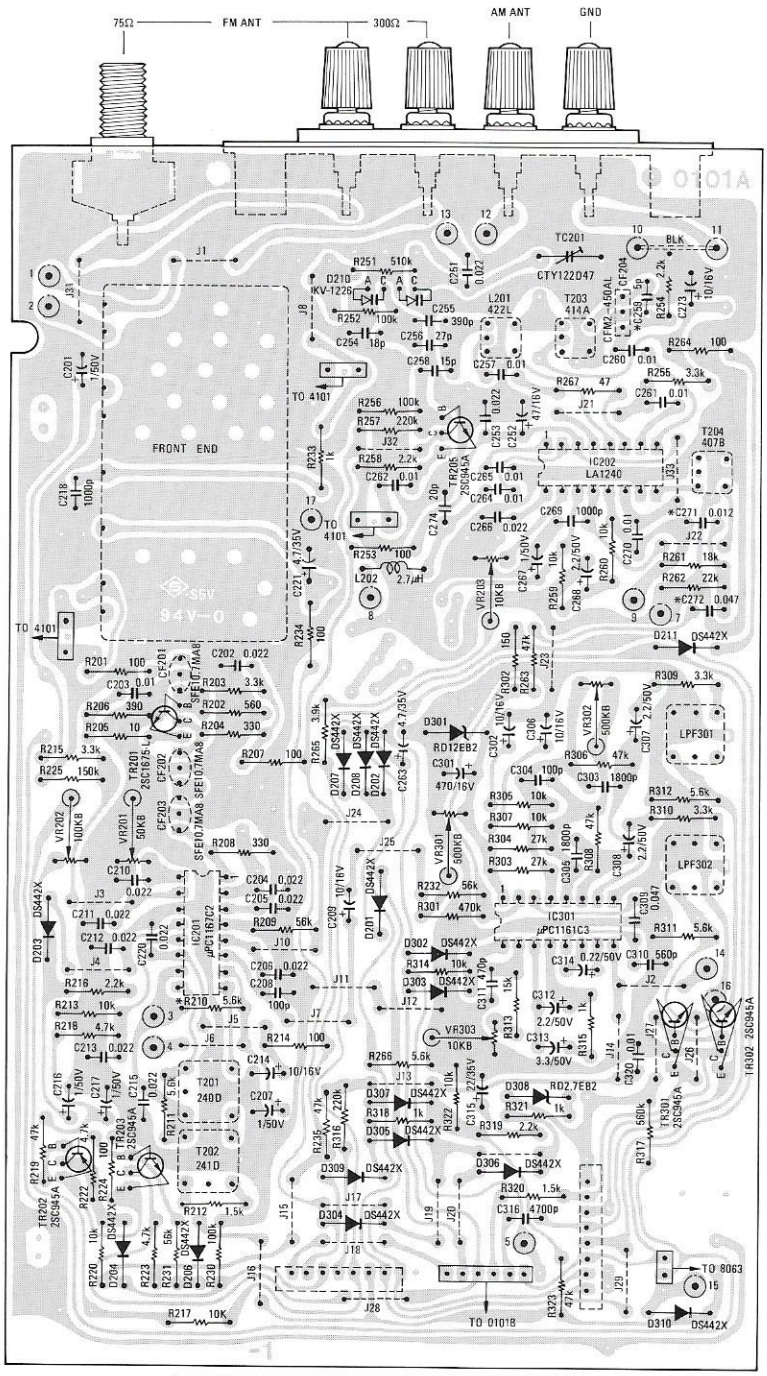

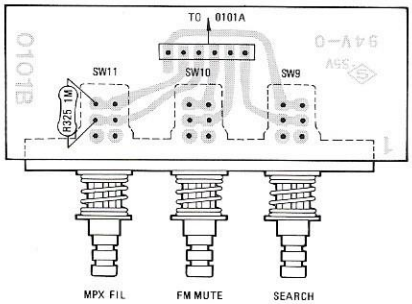

0101A,B TUNER & SEARCH SWITCH BOARD (TOP VIEW)

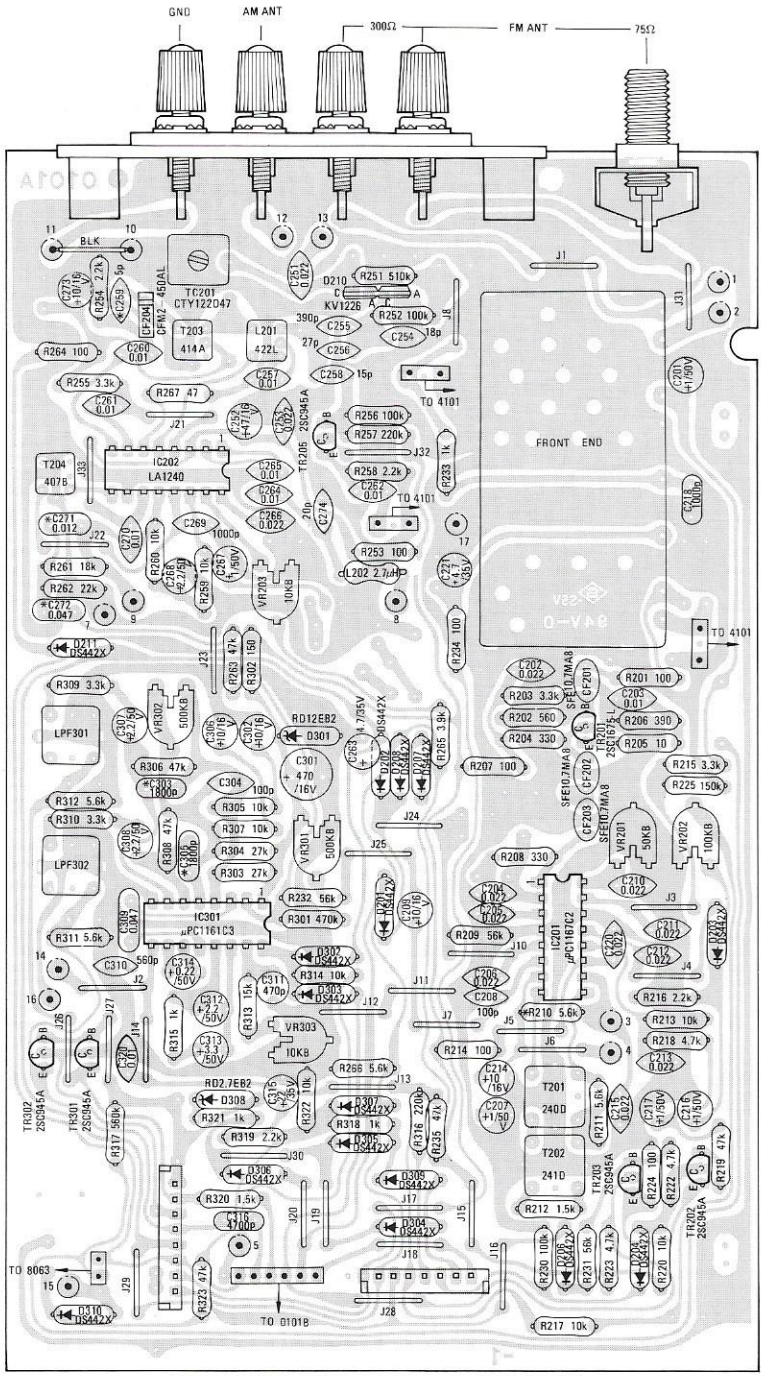

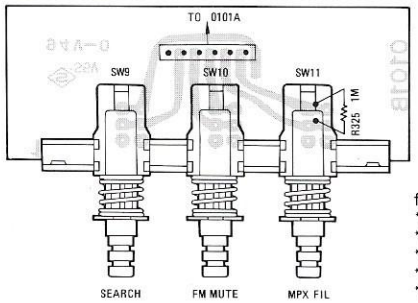

for Australian models
*R210: 10kΩ
*C259: 7PF
*C271: 5600PF
*C272: 0.039μF
*C303, C305: 1200PF

4101 SYNTHESIZER BOARD (TOP VIEW)

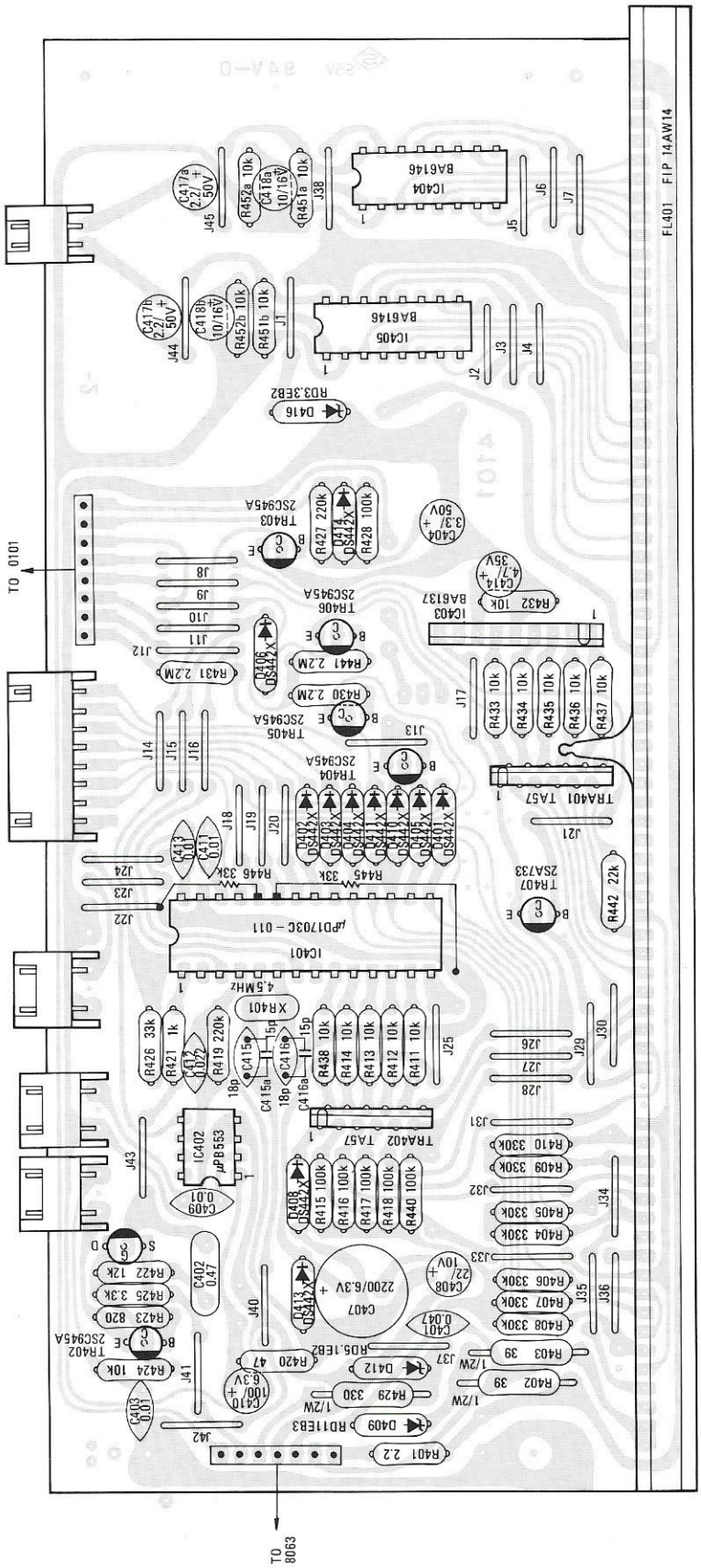

4101 SYNTHESIZER BOARD (BOTTOM VIEW)

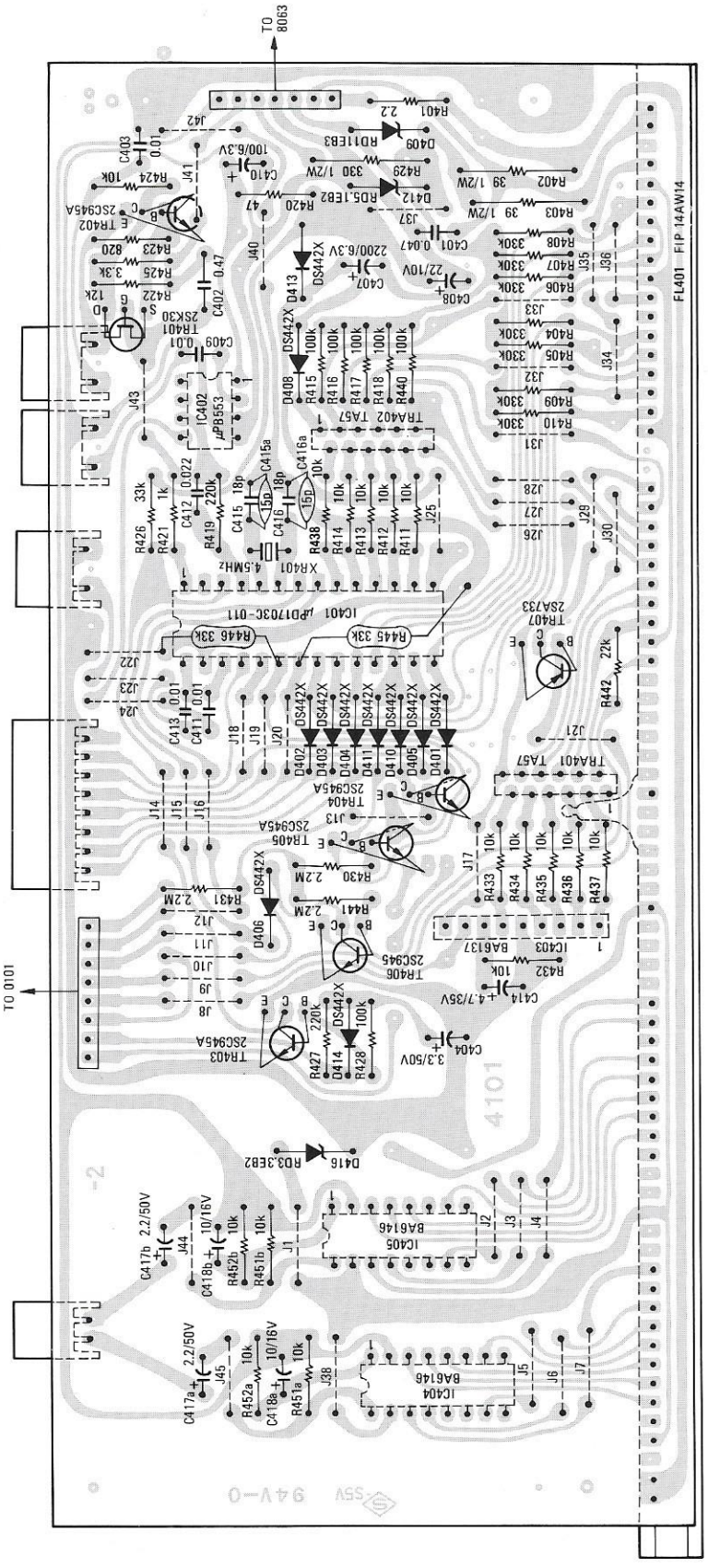

6122A,B,C MAIN AMP, POWER SWITCH & POWER INDICATOR BOARD (BOTTOM VIEW)

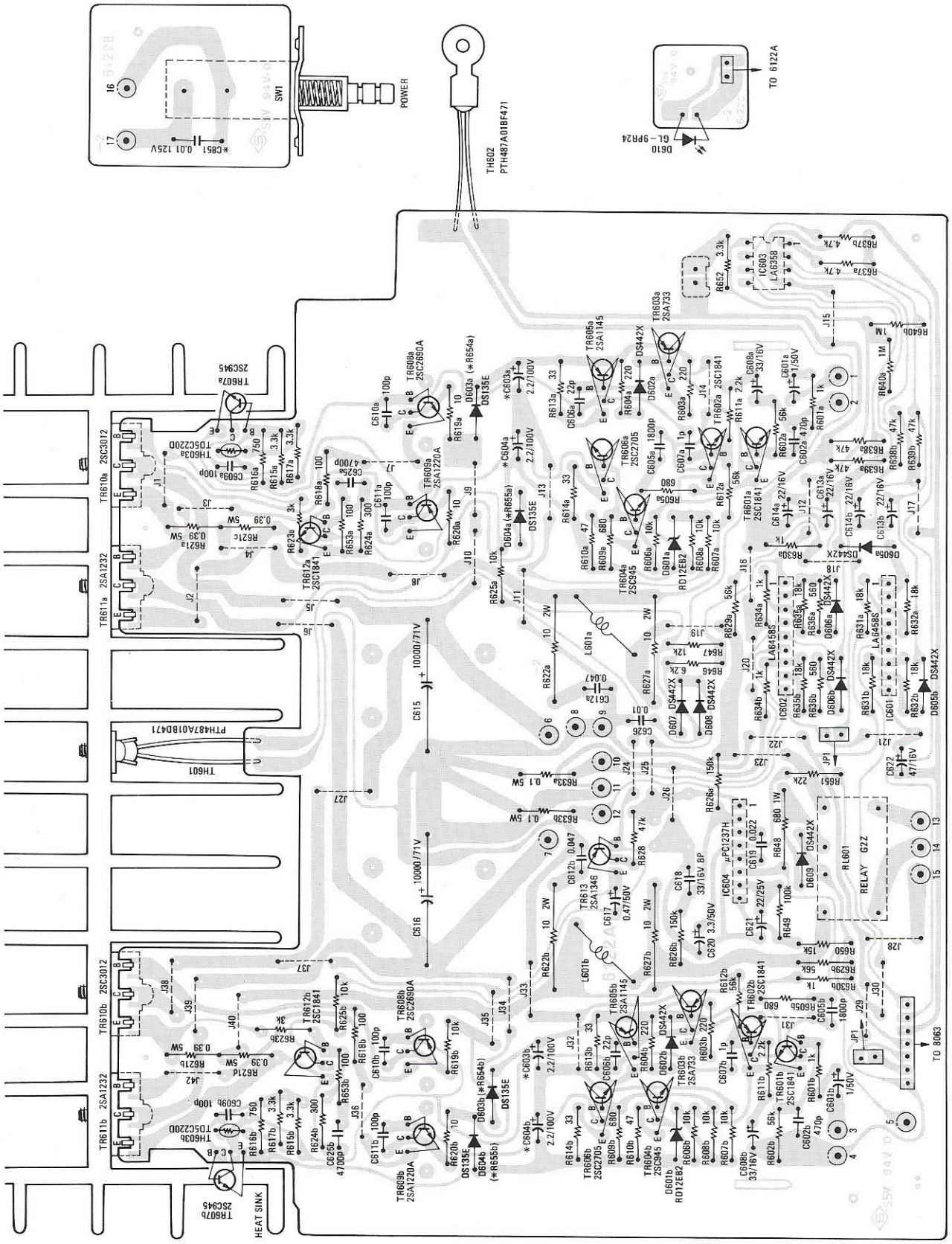

7321 KEYBOARD (TOP VIEW)

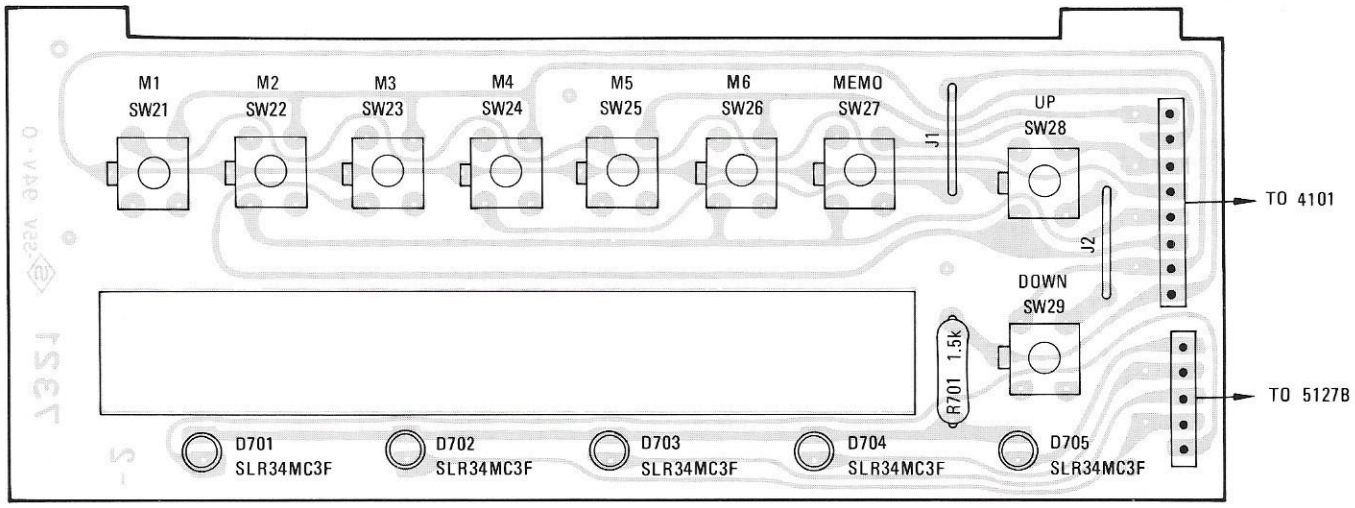

7321 KEYBOARD (BOTTOM VIEW)

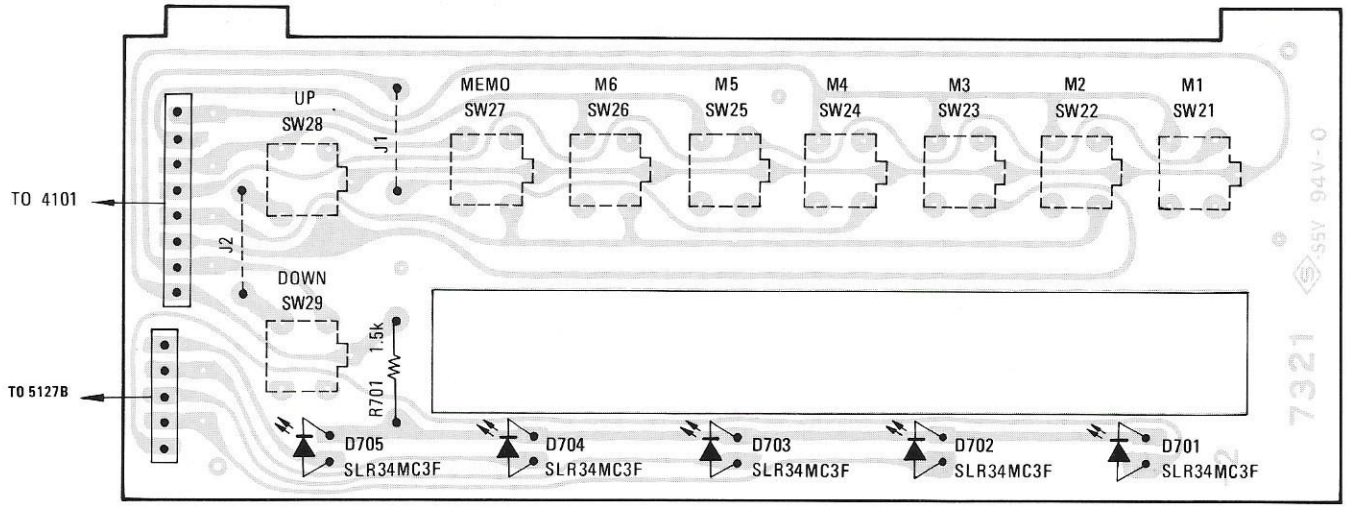

8063 POWER SUPPLY BOARD (TOP VIEW)

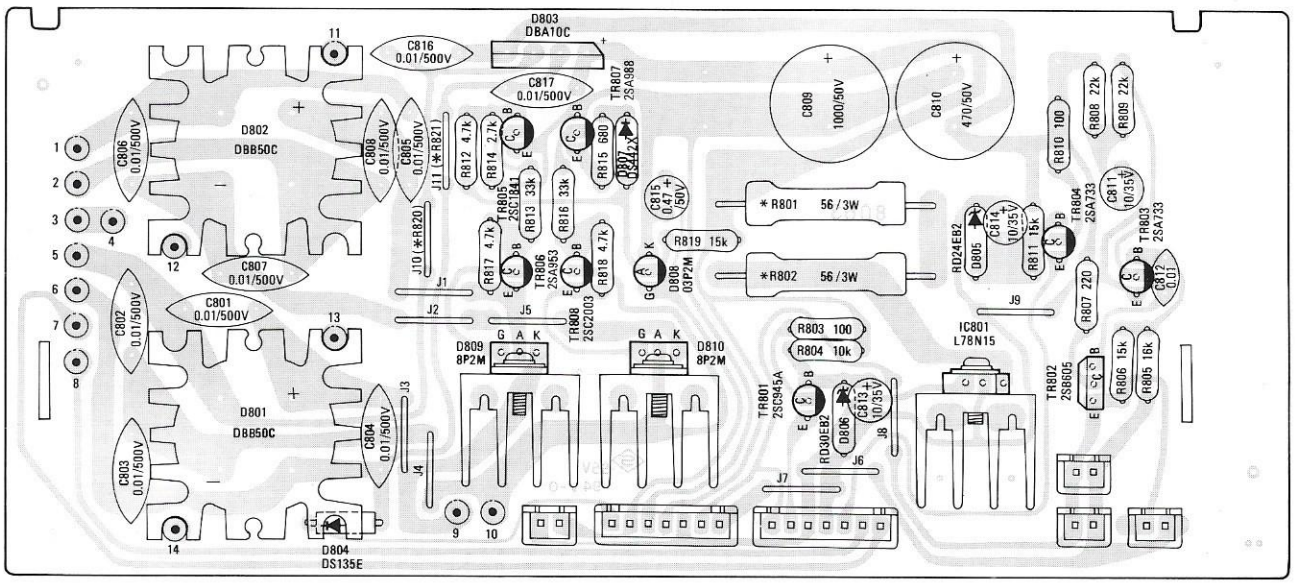

*R801, R802: 68Ω/3W for Australian models
*R820, R821: 2.2Ω/1/4W for Canadian models only

8063 POWER SUPPLY BOARD (BOTTOM VIEW)

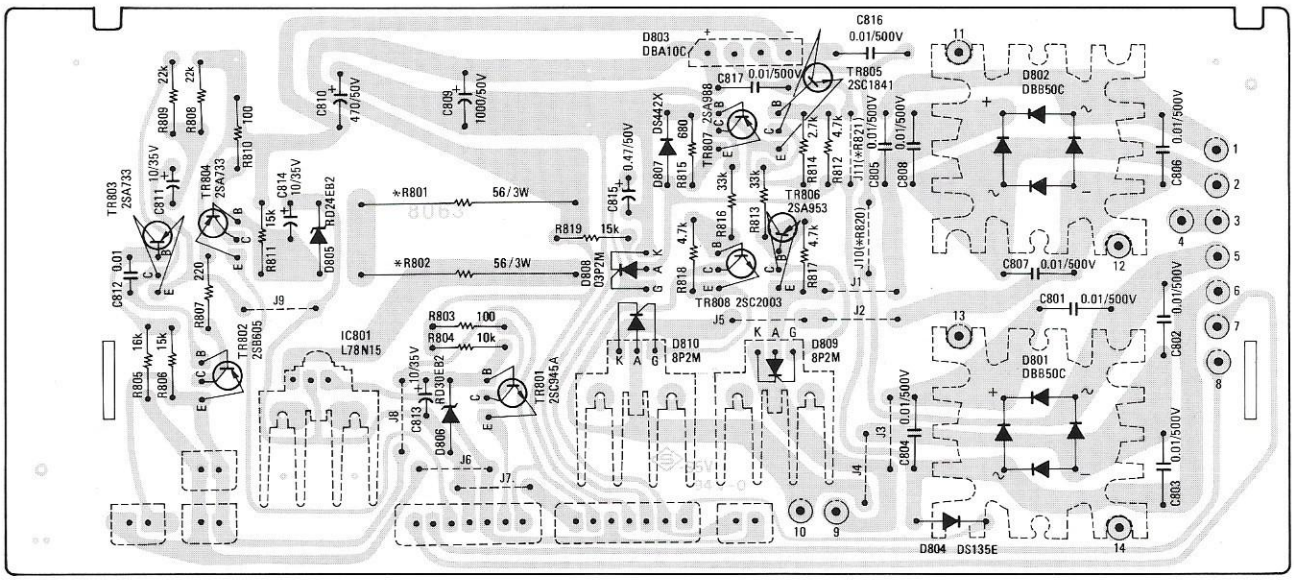

9064A,B TONE CONTROL & VOLUME BOARD (BOTTOM VIEW)

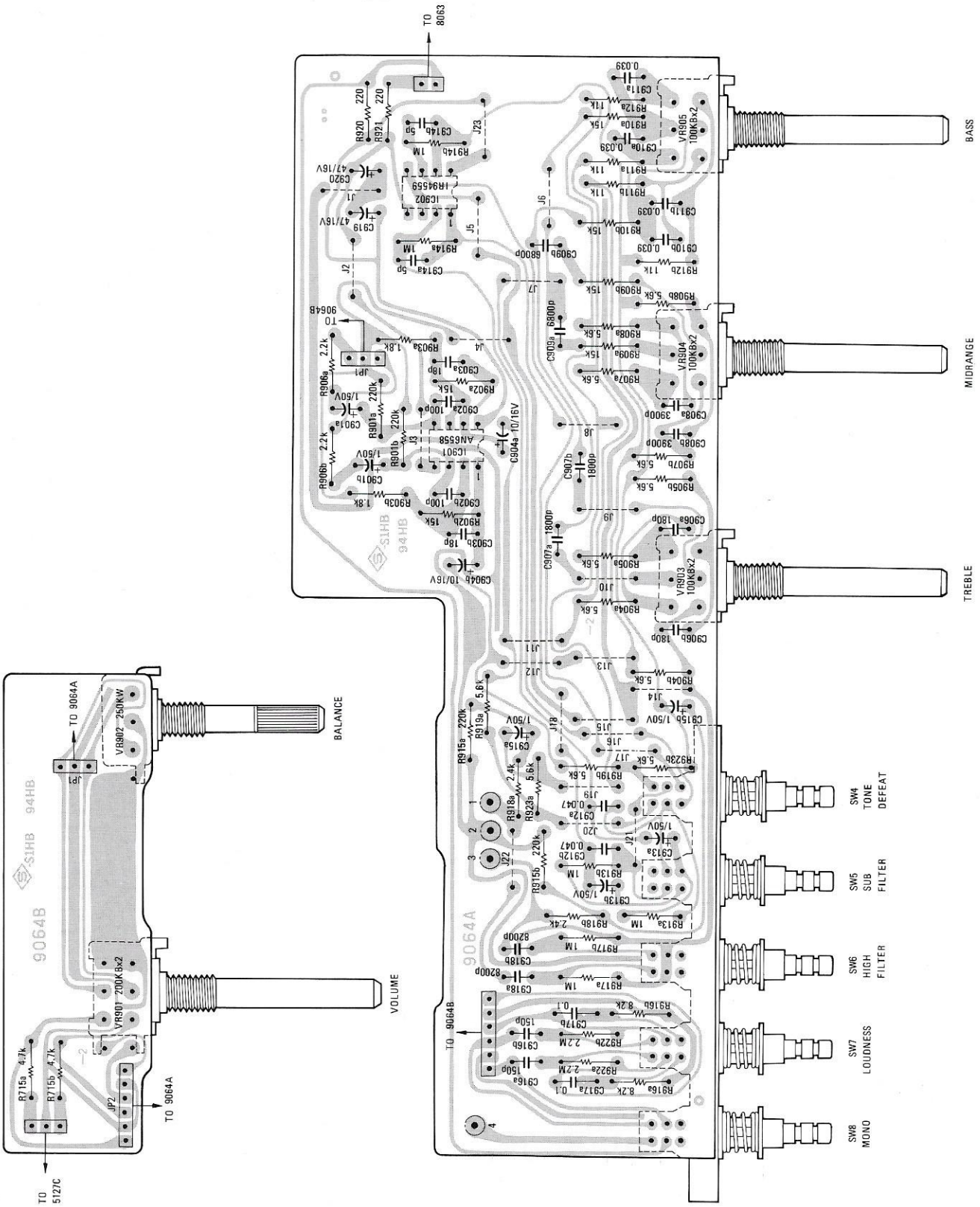

9064A,B TONE CONTROL & VOLUME BOARD (TOP VIEW)

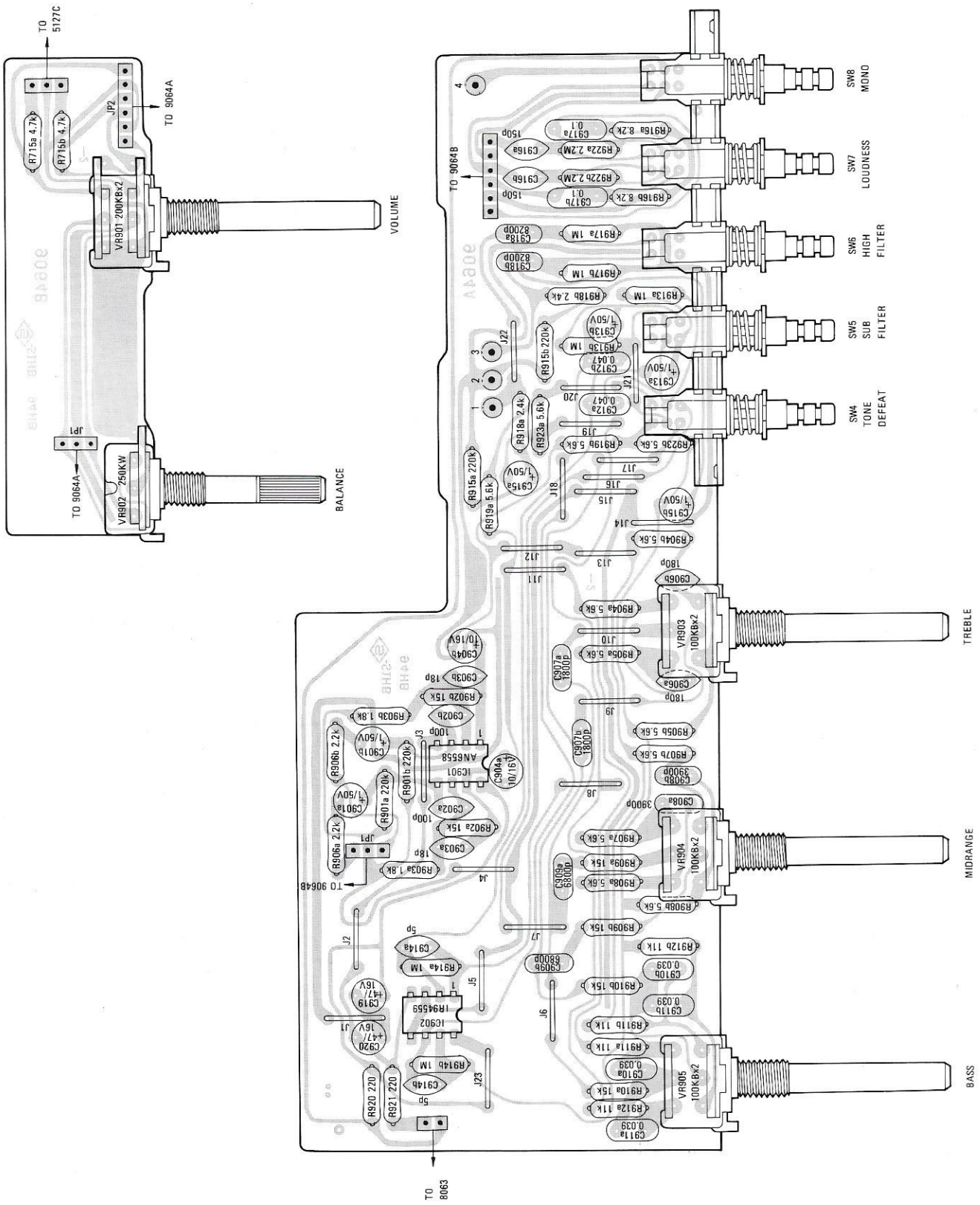

WIRING DIAGRAM

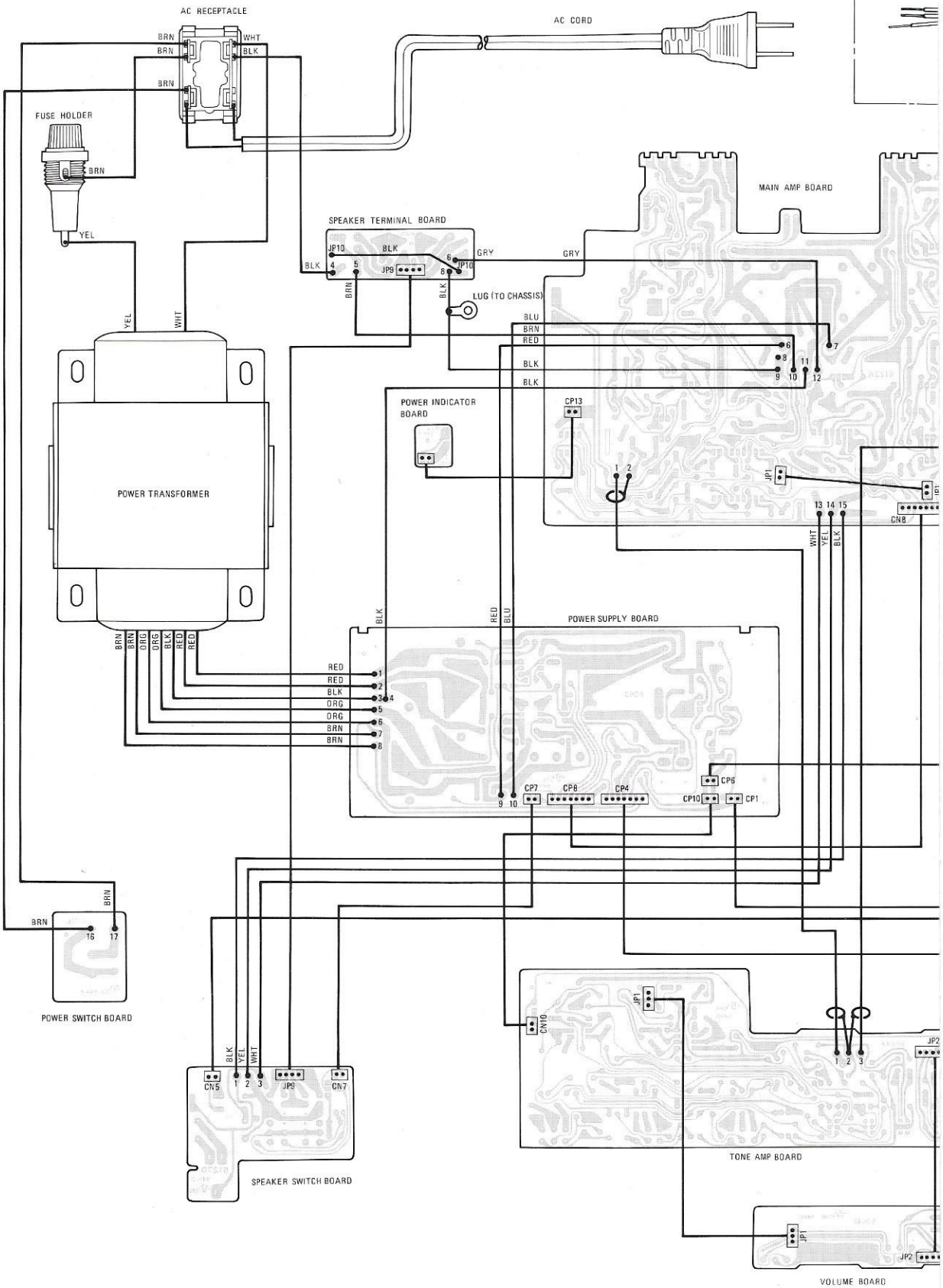

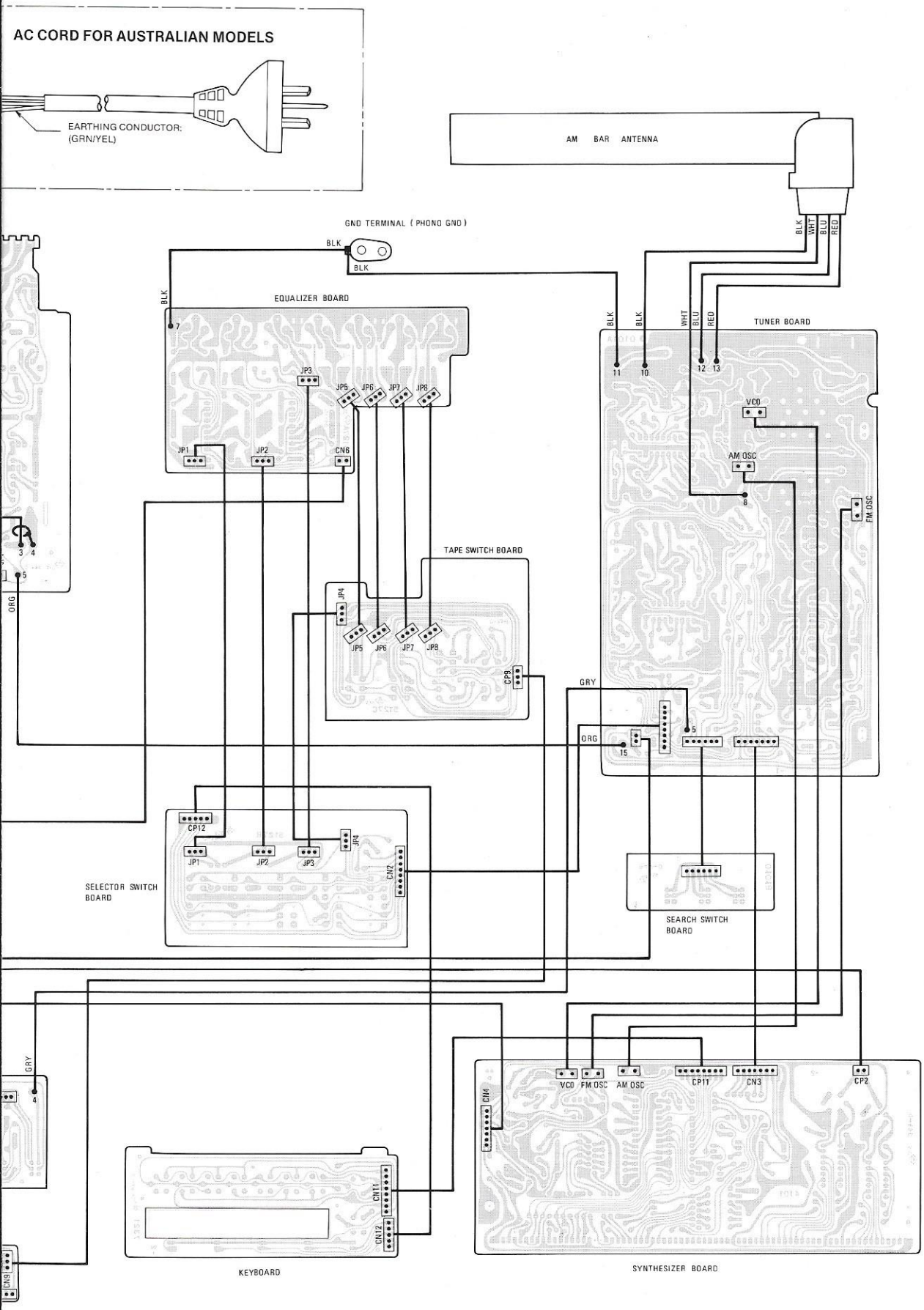
AC CORD FOR AUSTRALIAN MODELS
EARTHING CONDUCTOR:
(GRN/YEL)
AM BAR ANTENNA
GND TERMINAL (PHONO GND)
BLK
BLK
BLK
WHT
BLU
RED
EQUALIZER BOARD
7
JP3
JP5
JP6
JP7
JP8
JP1
JP2
CN6
TUNER BOARD
11
10
12
13
VCO
AM OSC
8
FM OSC
TAPE SWITCH BOARD
JP4
JP5
JP6
JP7
JP8
CP9
GRY
ORG
5
15
CP12
JP1
JP2
JP3
JP4
CN2
SELECTOR SWITCH
BOARD
SEARCH SWITCH
BOARD
GRY
4
CN4
VCO
FM OSC
AM OSC
CP11
CN3
CP2
CN11
CN12
KEYBOARD
SYNTHESIZER BOARD
CN9

ELECTRICAL PARTS LIST

PRODUCT SAFETY NOTE: Products marked with a ⚠ have special characteristics important to safety. Before replacing any of these components, read carefully the product safety notice of this Service Manual. Don't degrade the safety of the product through improper servicing.

CAPACITORS

Note: CH: ±0 ppm/°C with ±60 ppm/°C tolerance

Ref. No.	Description				R/S Part No.	Mfr's Part No.
C201	Electrolytic	1μF	50V	±20%	CC-105MJAP	65605105
C202	Ceramic	0.022μF	25V	$^{+80}_{-20}$ %	CC-223ZFCP	46223520
C203	Ceramic	0.01μF	50V	$^{+80}_{-20}$ %	CC-103ZJCP	46103530
C204	Ceramic	0.022μF	25V	$^{+80}_{-20}$ %	CC-223ZFCP	46223520
C205	Ceramic	0.022μF	25V	$^{+80}_{-20}$ %	CC-223ZFCP	46223520
C206	Ceramic	0.022μF	25V	$^{+80}_{-20}$ %	CC-223ZFCP	46223520
C207	Electrolytic	1μF	50V	±20%	CC-105MJAP	65605105
C208	Ceramic	100pF	50V	±10%	CC-101KJCP	47101401
C209	Electrolytic	10μF	16V	±20%	CC-106MDAP	65602106
C210	Ceramic	0.022μF	25V	$^{+80}_{-20}$ %	CC-223ZFCP	46223520
C211	Ceramic	0.022μF	25V	$^{+80}_{-20}$ %	CC-223ZFCP	46223520
C212	Ceramic	0.022μF	25V	$^{+80}_{-20}$ %	CC-223ZFCP	46223520
C213	Ceramic	0.022μF	25V	$^{+80}_{-20}$ %	CC-223ZFCP	46223520
C214	Electrolytic	10μF	16V	±20%	CC-106MDAP	65602106
C215	Ceramic	0.022μF	25V	$^{+80}_{-20}$ %	CC-223ZFCP	46223520
C216	Electrolytic	1μF	50V	±20%	CC-105MJAP	65605105
C217	Electrolytic	1μF	50V	±20%	CC-105MJAP	65605105
C218	Polyester	1000pF	100V	±10%	CC-102KLGP	20050102KA70
C219	Not Used					
C220	Ceramic	0.022μF	25V	$^{+80}_{-20}$ %	CC-223ZFCP	46223520
C221	Electrolytic	4.7μF	35V	±20%	CC-475MGAP	65604475
C251	Ceramic	0.022μF	25V	$^{+80}_{-20}$ %	CC-223ZFCP	46223520
C252	Electrolytic	47μF	16V	±20%	CC-476MDAP	65602476
C253	Ceramic	0.022μF	25V	$^{+80}_{-20}$ %	CC-223ZFCP	46223520
C254	Ceramic	18pF(CH)	50V	±10%	CF-1225	47180403
C255	Ceramic	390pF	50V	±5%	CC-391JJCP	47391301
C256	Ceramic	27pF	50V	±5%	CC-270JJCP	47270301
C257	Ceramic	0.01μF	50V	$^{+80}_{-20}$ %	CC-103ZJCP	46103530
C258	Ceramic	15pF(CH)	50V	±10%	CF-1190	47150403
*C259	Ceramic	5pF	50V	±0.5pF	CC-050DJCP	47050101
C260	Ceramic	0.01μF	50V	$^{+80}_{-20}$ %	CC-103ZJCP	46103530
C261	Ceramic	0.01μF	50V	$^{+80}_{-20}$ %	CC-103ZJCP	46103530
C262	Ceramic	0.01μF	50V	$^{+80}_{-20}$ %	CC-103ZJCP	46103530
C263	Electrolytic	4.7μF	35V	±20%	CC-475MGAP	65604475
C264	Ceramic	0.01μF	50V	$^{+80}_{-20}$ %	CC-103ZJCP	46103530
C265	Ceramic	0.01μF	50V	$^{+80}_{-20}$ %	CC-103ZJCP	46103530
C266	Ceramic	0.022μF	25V	$^{+80}_{-20}$ %	CC-223ZFCP	46223520
C267	Electrolytic	1μF	50V	±20%	CC-105MJAP	65605105
C268	Electrolytic	2.2μF	50V	±20%	CC-225MJAP	65605225
C269	Ceramic	1000pF	50V	$^{+80}_{-20}$ %	CC-102ZJCP	46102530
C270	Ceramic	0.01μF	50V	$^{+80}_{-20}$ %	CC-103ZJCP	46103530
*C271	Polyester	0.012μF	50V	±5%	CC-123JJGP	20054123J840
*C272	Plastic Film	0.047μF	50V	±5%	CC-473JJYP	20090473J801
C273	Electrolytic	10μF	16V	±20%	CC-106MDAP	65602106
C274	Ceramic	20pF	50V	±10%	CC-200JJCP	47200301

*C259: 7pF for Australian models
*C271: 5600pF for Australian models
*C272: 0.039μF for Australian models

Ref. No.	Description				R/S Part No.	Mfr's Part No.
C301	Electrolytic	470μF	16V	±20%	CC-477MDAP	64702477
C302	Electrolytic	10μF	16V	±20%	CC-106MDAP	65602106
*C303	Polyester	1800pF	50V	±5%	CC-182JJGP	20054182J840
C304	Ceramic	100pF	50V	±10%	CC-101KJCP	47101401
*C305	Polyester	1800pF	50V	±5%	CC-182JJGP	20054182J840
C306	Electrolytic	10μF	16V	±20%	CC-106MDAP	65602106
C307	Electrolytic	2.2μF	50V	±20%	CC-225MJAP	65605225
C308	Electrolytic	2.2μF	50V	±20%	CC-225MJAP	65605225
C309	Polyester	0.047μF	100V	±10%	CC-473KLGP	20050473KA70
C310	Ceramic	560pF	50V	±10%	CC-561KJCP	46561130
C311	Polystylene	470pF	125V	±5%	CC-471JMEP	44471347
C312	Electrolytic	2.2μF	50V	±20%	CC-225MJAP	65605225
C313	Electrolytic	3.3μF	50V	±20%	CC-335MJAP	65605335
C314	Electrolytic	0.22μF	50V	±20%	CC-224MJAP	65605224
C315	Electrolytic	22μF	16V	±20%	CC-226MDAP	65602226
C316	Polyester	4700pF	100V	±10%	CC-472KLGP	20050472KA70
C320	Ceramic	0.01μF	50V	$^{+80}_{-20}$ %	CC-103ZJCP	46103530
C401	Ceramic	0.047μF	25V	$^{+80}_{-20}$ %	CC-473ZFCP	46473520
C402	Plastic Film	0.47μF	50V	±5%	XB-0409	20090474J801
C403	Ceramic	0.01μF	50V	$^{+80}_{-20}$ %	CC-103ZJCP	46103530
C404	Electrolytic	3.3μF	50V	±20%	CC-335MJAP	65605335
C405	Not Used					
C406	Not Used					
C407	Electrolytic	2200μF	6.3V	±20%	CC-222MBAP	64700228
C408	Electrolytic	22μF	10V	±20%	CC-226MCAP	65601226
C409	Ceramic	0.01μF	50V	$^{+80}_{-20}$ %	CC-103JZCP	46103530
C410	Electrolytic	100μF	6.3V	±20%	CC-107MBAP	65600107
C411	Ceramic	0.01μF	50V	$^{+80}_{-20}$ %	CC-103ZJCP	46103530
C412	Ceramic	0.022μF	25V	$^{+80}_{-20}$ %	CC-223ZFCP	46223520
C413	Ceramic	0.01μF	50V	$^{+80}_{-20}$ %	CC-103ZJCP	46103530
C414	Electrolytic	4.7μF	35V	±20%	CC-475MGAP	65604475
C415	Ceramic	18pF(CH)	50V	±10%	CF-1225	47180403
C415a	Ceramic	15pF(CH)	50V	±5%		47150303
C416	Ceramic	18pF(CH)	50V	±10%	CF-1225	47180403
C416a	Ceramic	15pF(CH)	50V	±5%		47150303
C417a,b	Electrolytic	2.2μF	50V	±20%	CC-225MJAP	65605225
C418a,b	Electrolytic	10μF	16V	±20%	CC-106MDAP	65602106
C501a,b	Ceramic	100pF	50V	±10%	CC-101KJCP	46101130
C502a,b	Ceramic	1000pF	50V	±10%	CC-102KJCP	46102130
C503a,b	Electrolytic	1μF	50V	±20%	CC-105MJAP	65605105
C504a,b	Electrolytic	47μF	6.3V	±20%	CC-476MBAP	65600476
C505a,b	Polyester	0.01μF	100V	±10%	CC-103KLGP	20050103KA70
C506a,b	Polyester	0.033μF	100V	±10%	CC-333KLGP	20050333KA70
C507a,b	Electrolytic	1μF	50V	±20%	CC-105MJAP	65605105
C508a,b	Ceramic	100pF	50V	±10%	CC-101KJCP	46101130
C509a,b	Ceramic	1000pF	50V	±10%	CC-102KJCP	46102130
C510a,b	Electrolytic	1μF	50V	±20%	CC-105MJAP	65605105
C511a,b	Electrolytic	47μF	6.3V	±20%	CC-476MBAP	65600476
C512a,b	Polyester	0.01μF	100V	±10%	CC-103KLGP	20050103KA70
C513a,b	Polyester	0.033μF	100V	±10%	CC-333KLGP	20050333KA70
C514a,b	Electrolytic	1μF	50V	±20%	CC-105MJAP	65605105
C515	Ceramic	0.01μF	50V	$^{+80}_{-20}$ %	CC-103ZJCP	46103530
C516	Ceramic	0.01μF	50V	$^{+80}_{-20}$ %	CC-103ZJCP	46103530
C517	Ceramic	0.01μF	50V	$^{+80}_{-20}$ %	CC-103ZJCP	46103530
C518	Ceramic	0.01μF	50V	$^{+80}_{-20}$ %	CC-103ZJCP	46103530

*C303, C305: 1200pF for Australian models

Ref. No.	Description				R/S Part No.	Mfr's Part No.
C601a,b	Electrolytic	1μF	50V	±20%	CC-105MJAP	65605105
C602a,b	Ceramic	470pF	50V	±10%	CC-471KJCP	46471130
C603a,b	Electrolytic	2.2μF	100V	±20%	CC-225MLAP	65608225
C604a,b	Electrolytic	2.2μF	100V	±20%	CC-225MLAP	65608225
C605a,b	Ceramic	1800pF	50V	±10%		46182130
C606a,b	Ceramic	22pF	500V	±10%	CC-220KUCP	47220451
C607a,b	Ceramic	1pF	500V	±0.5pF	CC-010DUCP	47010151
C608a,b	Electrolytic	33μF	16V	±20%	CC-336MDAP	65602336
C609a,b	Ceramic	100pF	50V	±10%	CC-101KJCP	46101130
C610a,b	Ceramic	100pF	500V	±10%	CC-220KUCP	47101451
C611a,b	Ceramic	100pF	500V	±10%	CC-220KUCP	47101451
C612a,b	Polyester	0.047μF	100V	±10%	CC-473KLGP	20050473KA70
C613a,b	Electrolytic	22μF	16V	±20%	CC-226MDAP	65602226
C614a,b	Electrolytic	22μF	16V	±20%	CC-226MDAP	65602226
C615	Electrolytic	10000μF	71V	±20%	CC-109MJAP	2027103Z0021
C616	Electrolytic	10000μF	71V	±20%	CC-109MJAP	2027103Z0021
C617	Electrolytic	0.47μF	50V	±20%	CC-474MJAP	65605474
C618	Electrolytic	33μF	16V	±20% B.P.	CC-336MDAP	65502336
C619	Ceramic	0.022μF	25V	$^{+80}_{-20}$ %	CC-223ZFCP	46223520
C620	Electrolytic	3.3μF	50V	±20%	CC-335MJAP	65605335
C621	Electrolytic	22μF	25V	±20%	CC-226MDAP	65603226
C622	Electrolytic	47μF	16V	±20%	CC-476MDAP	65602476
C623	Electrolytic	10μF	16V	±20%	CC-106MDAP	65602106
C624	Electrolytic	10μF	16V	±20%	CC-106MDAP	65602106
C625a,b	Ceramic	4700pF	50V	±10%	CC-472KJCP	46472130
C626	Ceramic	0.01μF	50V	$^{+80}_{-20}$ %	CC-103ZJCP	46103530
C627a,b	Ceramic	1000pF	50V	±10%	CC-102KJCP	46102130
C628a,b	Ceramic	1000pF	50V	±10%	CC-102KJCP	46102130
C629a,b	Ceramic	1000pF	50V	±10%	CC-102KJCP	46102130
C701	Electrolytic	10μF	16V	±20%	CC-106MDAP	65602106
C710	Ceramic	0.01μF	50V	$^{+80}_{-20}$ %	CC-103ZJCP	46103530
C711	Ceramic	0.047μF	25V	$^{+80}_{-20}$ %	CC-473ZFCP	46473520
C712	Ceramic	0.047μF	25V	$^{+80}_{-20}$ %	CC-473ZFCP	46473520
C801	Ceramic	0.01μF	500V	$^{+100}_{-0}$ %	CC-103PUCP	46103640
C802	Ceramic	0.01μF	500V	$^{+100}_{-0}$ %	CC-103PUCP	46103640
C803	Ceramic	0.01μF	500V	$^{+100}_{-0}$ %	CC-103PUCP	46103640
C804	Ceramic	0.01μF	500V	$^{+100}_{-0}$ %	CC-103PUCP	46103640
C805	Ceramic	0.01μF	500V	$^{+100}_{-0}$ %	CC-103PUCP	46103640
C806	Ceramic	0.01μF	500V	$^{+100}_{-0}$ %	CC-103PUCP	46103640
C807	Ceramic	0.01μF	500V	$^{+100}_{-0}$ %	CC-103PUCP	46103640
C808	Ceramic	0.01μF	500V	$^{+100}_{-0}$ %	CC-103PUCP	46103640
C809	Electrolytic	1000μF	50V	±20%	CC-102MJAP	2025C102M860
C810	Electrolytic	470μF	50V	±20%	CC-477MJAP	64705477
C811	Electrolytic	10μF	35V	±20%	CC-106MGAP	65604106
C812	Ceramic	0.01μF	50V	$^{+80}_{-20}$ %	CC-103ZJCP	46103530
C813	Electrolytic	10μF	35V	±20%	CC-106MGAP	65604106
C814	Electrolytic	10μF	35V	±20%	CC-106MGAP	65604106
C815	Electrolytic	0.47μF	50V	±20%	CC-474MJAP	65605474
C816	Ceramic	0.01μF	500V	$^{+100}_{-0}$ %	CC-103PUCP	46103640
C817	Ceramic	0.01μF	500V	$^{+100}_{-0}$ %	CC-103PUCP	46103640

*C603, C604: 47μF 80V for Canadian models

Ref. No.	Description				R/S Part No.	Mfr's Part No.
*⚠C851	Ceramic	0.01μF	125V	$^{+80}_{-20}$%	CC-103ZMCP	50000246
C901a,b	Electrolytic	1μF	50V	±20%	CC-105MJAP	65605105
C902a,b	Ceramic	100pF	50V	±10%	CC-101KJCP	46101130
C903a,b	Ceramic	18pF	50V	±10%	CC-180KJCP	47180401
C904a,b	Electrolytic	10μF	16V	±10%	CC-106MDAP	65602106
C905	Not Used					
C906a,b	Ceramic	180pF	50V	±10%	CC-181KJCP	46181130
C907a,b	Polyester	1800pF	100V	±10%	CC-182KLGP	20050182KA70
C908a,b	Polyester	3900pF	100V	±10%	CC-392KLGP	20050392KA70
C909a,b	Polyester	6800pF	100V	±10%	CC-682KLGP	20050682KA70
C910a,b	Polyester	0.039μF	100V	±10%	CC-393KLGP	20050393KA70
C911a,b	Polyester	0.039μF	100V	±10%	CC-393KLGP	20050393KA70
C912a,b	Polyester	0.047μF	100V	±10%	CC-473KLGP	20050473KA70
C913a,b	Electrolytic	1μF	50V	±20%	CC-105MJAP	65605105
C914a,b	Ceramic	5pF	50V	±0.5pF	CC-050DJCP	47050101
C915a,b	Electrolytic	1μF	50V	±20%	CC-105MJAP	65605105
C916a,b	Ceramic	150pF	50V	±10%	CC-151KJCP	46151130
C917a,b	Polyester	0.1μF	100V	±10%	CC-104KLGP	20050104KA70
C918a,b	Polyester	8200pF	100V	±10%	CC-822KLGP	20050822KA70
C919	Electrolytic	47μF	16V	±20%	CC-476MDAP	65602476
C920	Electrolytic	47μF	16V	±20%	CC-476MDAP	65602476

CERAMIC FILTERS

Ref. No.	Description	R/S Part No.	Mfr's Part No.
CF201	SFE 10.7MA8-A	CA-2696	35300030
CF202	SFE 10.7MA8-A	CA-2696	35300030
CF203	SFE 10.7MA8-A	CA-2696	35300030
CF204	CFM 450AL	C-1340	35300048

COILS & TRANSFORMERS

Ref. No.	Description	R/S Part No.	Mfr's Part No.
L201	AM OSC 422L	CA-8669	35504226
L202	Choke, 2.7μH	CB-2668	35136278
L251	AM Bar Antenna	A-0521	35400871
L601a,b	Choke	CB-2624	35199022
T201	FM DET. 240D	CA-8670	35702404
T202	FM DET. 241D	CA-8671	35702414
T203	AM IFT 414A	CA-8672	35704141
T204	AM IFT 407B	CA-7835	35704072
⚠T851	Power Transformer (UL)	TA-1168	35900515
	(CSA)		35900516
	(Australia)		35900517

*C851: 0.01μF 400V for Australian models

CRYSTAL

Ref. No.	Description	R/S Part No.	Mfr's Part No.
XR401	4.5 MHz	MX-1038	35200008

DIODES

Ref. No.	Description	R/S Part No.	Manufacturer	Mfr's Part No.
D201	DS442X, Silicon	DX-1387	Sanyo	30602241
D202	DS442X, Silicon	DX-1387	Sanyo	30602241
D203	DS442X, Silicon	DX-1387	Sanyo	30602241
D204	DS442X, Silicon	DX-1387	Sanyo	30602241
D205	Not Used			
D206	DS442X, Silicon	DX-1387	Sanyo	30602241
D207	DS442X, Silicon	DX-1387	Sanyo	30602241
D208	DS442X, Silicon	DX-1387	Sanyo	30602241
D209	Not Used			
D210a,b	KV1226, Vari-cap.	DX-1420	Toko	30601861
D211	DS442X, Silicon	DX-1387	Sanyo	30602241
D301	RD12EB2, Zener, Silicon	DX-2343	NEC	30602131
D302	DS442X, Silicon	DX-1387	Sanyo	30602241
D303	DS442X, Silicon	DX-1387	Sanyo	30602241
D304	DS442X, Silicon	DX-1387	Sanyo	30602241
D305	DS442X, Silicon	DX-1387	Sanyo	30602241
D306	DS442X, Silicon	DX-1387	Sanyo	30602241
D307	DS442X, Silicon	DX-1387	Sanyo	30602241
D308	RD2.7EB2, Zener, Silicon	DX-1741	NEC	30601991
D309	DS442X, Silicon	DX-1387	Sanyo	30602241
D310	DS442X, Silicon	DX-1387	Sanyo	30602241
D401	DS442X, Silicon	DX-1387	Sanyo	30602241
D402	DS442X, Silicon	DX-1387	Sanyo	30602241
D403	DS442X, Silicon	DX-1387	Sanyo	30602241
D404	DS442X, Silicon	DX-1387	Sanyo	30602241
D405	DS442X, Silicon	DX-1387	Sanyo	30602241
D406	DS442X, Silicon	DX-1387	Sanyo	30602241
D407	Not Used			
D408	DS442X, Silicon	DX-1387	Sanyo	30602241
D409	RD11EB3, Zener, Silicon	DX-2150		30602123
D410	DS442X, Silicon	DX-1387	Sanyo	30602241
D411	DS442X, Silicon	DX-1387	Sanyo	30602241
D412	RD5.1EB2, Zener, Silicon	DX-1356	NEC	30602051
D413	DS442X, Silicon	DX-1387	Sanyo	30602241
D414	DS442X, Silicon	DX-1387	Sanyo	30602241
*D415	DS442X, Silicon	DX-1387	Sanyo	30602241
D416	RD3.3EB2, Zener, Silicon	DX-2200	NEC	30602001
D601a,b	RD12EB2	DX-2343	NEC	30602131
D602a,b	DS442X, Silicon	DX-1387	Sanyo	30602241
*D603a,b	DS135E, Rectifier, Silicon	DX-2347	NEC	30602432
*D604a,b	DS135E, Rectifier, Silicon	DX-2347	NEC	30602432
D605a,b	DS442X, Silicon	DX-1387	Sanyo	30602241

*D415: for Australian models only
*D603a,b, D604a,b: not used for Canadian models

Ref. No.	Description	R/S Part No.	Manufacturer	Mfr's Part No.
D606a,b	DS442X, Silicon	DX-1387	Sanyo	30602241
D607	DS442X, Silicon	DX-1387	Sanyo	30602241
D608	DS442X, Silicon	DX-1387	Sanyo	30602241
D609	DS442X, Silicon	DX-1387	Sanyo	30602241
D610	LED, GL-9PR24	L-1723	Sanyo	20520010034E
D701	LED, SLR34MC3F	L-1795	Sharp	20520020043F
D702	LED, SLR34MC3F	L-1795	Sharp	20520020043F
D703	LED, SLR34MC3F	L-1795	Sharp	20520020043F
D704	LED, SLR34MC3F	L-1795	Sharp	20520020043F
D705	LED, SLR34MC3F	L-1795	Sharp	20520020043F
D801	DBB50C, Rectifier Bridge, Silicon	DX-2345	Sanyo	205050017001
D802	DBB50C, Rectifier Bridge, Silicon	DX-2345	Sanyo	205050017001
D803	DBA10C, Rectifier Bridge, Silicon	DX-2399	Sanyo	205050019001
D804	DS135E, Rectifier, Silicon	DX-2347	NEC	30602432
D805	RD24EB2, Zener, Silicon	DX-1817	NEC	30602181
D806	RD30EB2, Zener, Silicon	DX-1544	NEC	30602201
D807	DS442X, Silicon	DX-1387	Sanyo	30602241
D808	Thyristor, 03P2M	RX-0484	NEC	205070002006
D809	Thyristor, 8P2M	RX-0485	NEC	205070003006
D810	Thyristor, 8P2M	RX-0485	NEC	205070003006

FILTERS

Ref. No.	Description	R/S Part No.	Mfr's Part No.
LPF301	FM MPX 19 kHz	C-1514	35000260
LPF302	FM MPX 19 kHz	C-1514	35000260

FLUORESCENT INDICATOR PANEL

Ref. No.	Description	R/S Part No.	Mfr's Part No.
FL401	14AW14	G-0604	205204000396

FRONT END ASSEMBLY

Ref. No.	Description	R/S Part No.	Mfr's Part No.
	FE407A03	C-4854	95029001

FUSE

Ref. No.	Description	R/S Part No.	Mfr's Part No.
⚠F801	250V 5A (USA, Canada) 250V 2.5A (Australia)	HF-0068	38337250 38444225

INTEGRATED CIRCUITS

Ref. No.	Description	R/S Part No.	Manufacturer	Mfr's Part No.
IC201	μPC1167C2, Linear, FM IF Amp	MX-5209	NEC	30901130
IC202	LA1240, Linear, AM Tuner	MX-4367	Sanyo	30900460
IC301	μPC1161C3, Linear, FM MPX	MX-5427	NEC	30901230
IC401	μPD1703C-011, C-MOS, Synthesizer	MX-4840	NEC	30901100
	μPD1703C-014, C-MOS, Synthesizer (Australia)		NEC	205440000406
IC402	μPB553AC, Digital, Prescaler	MX-5840	NEC	30901110
IC403	BA6137, Linear, Signal Level Meter	MX-6240	Rohm	20543000070F
IC404	BA6146, Linear, Power Meter	MX-6241	Rohm	20543000080F
IC405	BA6146, Linear, Power Meter	MX-6241	Rohm	20543000080F
TRA401	TA-57, Transistor Array	MX-6244	Rohm	20544900060F
TRA402	TA-57, Transistor Array	MX-6244	Rohm	20544900060F
IC501	LA6458SS, Linear, Equalizer Amp	MX-5520	Sanyo	205410000911
IC502	LA6458SS, Linear, Equalizer Amp	MX-5520	Sanyo	205410000911
IC601	LA6458S, Linear, Impedance Detector	MX-6247	Sanyo	205410000901
IC602	LA6458S, Linear, Impedance Detector	MX-6247	Sanyo	205410000901
IC603	LA6358, Linear, Impedance Detector	MX-6343	Sanyo	205410001701
IC604	μPC1237H, Linear, Protector	MX-5525	NEC	205419000206
IC801	L78N15, Linear, Voltage Regulator	MX-5526	Sanyo	205420001001
IC901	AN6558, Linear, Tone Amp	MX-6344	Matsushita	205410001504
IC902	IR94559, Linear, Tone Amp	MX-5792	Sharp	20541000080E

PCB ASSEMBLIES

Ref. No.	Description	R/S Part No.	Mfr's Part No.
0101A	Tuner Board	XB-0407	97010110A
0101B	SEARCH Switch Board	XB-0408	97010110B
4101	Synthesizer Board (USA, Canada)	XB-0409	97410120
4101	Synthesizer Board (Australia)		97410150
5127A	Equalizer Board	XB-0410	97512720A
5127B	Selector Switch Board	XB-0411	97512720B
5127C	TAPE Switch Board	XB-0412	97512720C
5127D	Speaker Switch Board	XB-0413	97512720D
5127E	Speaker Terminal Board	XB-0414	97512720E
6122A	Main Amp Board	XB-0415	97612220A
6122B	Power Switch Board	XB-0416	97612220B
6122C	POWER Indicator Board	XB-0417	97612220C
7321	Keyboard	K-6289	97732120
8063	Power Supply Board	XB-0427	97806320
9064A	Tone Control Board	XB-0418	97906420A
9064B	VOLUME Board	XB-0419	97906420B

RELAY

Ref. No.	Description	R/S Part No.	Mfr's Part No.
RL601	G2Z-222P-20	R-8138	82000230

RESISTORS

Note: All resistors are 1/4 watt carbon ±5% tolerance, unless otherwise specified.

Ref. No.	Description	R/S Part No.	Mfr's Part No.	Ref. No.	Description	R/S Part No.	Mfr's Part No.
R201	100 Ω	N-0132EEC	76843101	R262	22 KΩ	N-0311EEC	76843223
R202	560 Ω	N-0176EEC	76843561	R263	47 KΩ	N-0340EEC	76843473
R203	3.3 KΩ	N-0230EEC	76843332	R264	100 Ω	N-0132EEC	76843101
R204	330 Ω	N-0159EEC	76843331	R265	3.9 KΩ	N-0237EEC	76843392
R205	10 Ω	N-0063EEC	76843100	R266	5.6 KΩ	N-0257EEC	76843562
R206	390 Ω	N-0162EEC	76843391	R267	47 Ω	N-0099EEC	76843470
R207	100 Ω	N-0132EEC	76843101				
R208	330 Ω	N-0159EEC	76843331	R301	470 KΩ	N-0423EEC	76843474
R209	56 KΩ	N-0345EEC	76843563	R302	150 Ω	N-0142EEC	76843151
*R210	5.6 KΩ	N-0257EEC	76843562	R303	27 KΩ	N-0316EEC	76843273
R211	5.6 KΩ	N-0257EEC	76843562	R304	27 KΩ	N-0316EEC	76843273
R212	1.5 KΩ	N-0206EEC	76843152	R305	10 KΩ	N-0281EEC	76843103
R213	10 KΩ	N-0281EEC	76843103	R306	47 KΩ	N-0340EEC	76843473
R214	100 Ω	N-0132EEC	76843101	R307	10 KΩ	N-0281EEC	76843103
R215	3.3 KΩ	N-0230EEC	76843332	R308	47 KΩ	N-0340EEC	76843473
R216	2.2 KΩ	N-0216EEC	76843222	R309	3.3 KΩ	N-0230EEC	76843332
R217	10 KΩ	N-0281EEC	76843103	R310	3.3 KΩ	N-0230EEC	76843332
R218	4.7 KΩ	N-0247EEC	76843472	R311	5.6 KΩ	N-0257EEC	76843562
R219	47 KΩ	N-0340EEC	76843473	R312	5.6 KΩ	N-0257EEC	76843562
R220	10 KΩ	N-0281EEC	76843103	R313	15 KΩ	N-0297EEC	76843153
R221	Not Used			R314	10 KΩ	N-0281EEC	76843103
R222	4.7 KΩ	N-0247EEC	76843472	R315	1 KΩ	N-0196EEC	76843102
R223	4.7 KΩ	N-0247EEC	76843472	R316	220 KΩ	N-0396EEC	76843224
R224	100 Ω	N-0132EEC	76843101	R317	560 KΩ	N-0429EEC	76843564
R225	150 KΩ	N-0384EEC	76843154	R318	1 KΩ	N-0196EEC	76843102
				R319	2.2 KΩ	N-0216EEC	76843222
R230	100 KΩ	N-0371EEC	76843104	R320	1.5 KΩ	N-0206EEC	76843152
R231	56 KΩ	N-0345EEC	76843563	R321	1 KΩ	N-0196EEC	76843102
R232	56 KΩ	N-0345EEC	76843563	R322	10 KΩ	N-0281EEC	76843103
R233	1 KΩ	N-0196EEC	76843102	R323	47 KΩ	N-0340EEC	76843473
R234	100 Ω	N-0132EEC	76843101	R325	1 MΩ	N-0445EEC	76843105
R235	47 KΩ	N-0340EEC	76843473	⚠ R401	Fusible, 2.2Ω 1/4W ±5%	RX-0452	80946228
R251	510 KΩ	N-0428EEC	76843514	⚠ R402	Carbon, Fail Safe, 39Ω 1/2W ±5%	RX-0450	72743390
R252	100 KΩ	N-0371EEC	76843104				
R253	100 Ω	N-0132EEC	76843101				
R254	2.2 KΩ	N-0216EEC	76843222	⚠ R403	Carbon, Fail Safe, 39Ω 1/2W ±5%	RX-0450	72743390
R255	3.3 KΩ	N-0230EEC	76843332				
R256	100 KΩ	N-0371EEC	76843104				
R257	220 KΩ	N-0396EEC	76843224	R404	330 KΩ	N-0410EEC	76843334
R258	2.2 KΩ	N-0216EEC	76843222	R405	330 KΩ	N-0410EEC	76843334
R259	10 KΩ	N-0281EEC	76843103	R406	330 KΩ	N-0410EEC	76843334
R260	10 KΩ	N-0281EEC	76843103	R407	330 KΩ	N-0410EEC	76843334
R261	18 KΩ	N-0281EEC	76843183	R408	330 KΩ	N-0410EEC	76843334

*R210: 10KΩ for Australian models

Ref. No.	Description	R/S Part No.	Mfr's Part No.
R409	330 KΩ	N-0410EEC	76843334
R410	330 KΩ	N-0410EEC	76843334
R411	10 KΩ	N-0281EEC	76843103
R412	10 KΩ	N-0281EEC	76843103
R413	10 KΩ	N-0281EEC	76843103
R414	10 KΩ	N-0281EEC	76843103
R415	100 KΩ	N-0371EEC	76843104
R416	100 KΩ	N-0371EEC	76843104
R417	100 KΩ	N-0371EEC	76843104
R418	100 KΩ	N-0371EEC	76843104
R419	220 KΩ	N-0396EEC	76843224
R420	47 Ω	N-0099EEC	76843470
R421	1 KΩ	N-0196EEC	76843102
R422	12 KΩ	N-0288EEC	76843123
R423	820 Ω	N-0187EEC	76843821
R424	10 KΩ	N-0281EEC	76843103
R425	3.3 KΩ	N-0230EEC	76843332
R426	33 KΩ	N-0324EEC	76843333
R427	220 KΩ	N-0396EEC	76843224
R428	100 KΩ	N-0371EEC	76843104
R429	Carbon, Fail Safe, 330Ω 1/2W ±5%	RX-0450	72743331
R430	2.2 MΩ	N-0454EEC	76843225
R431	2.2 MΩ	N-0454EEC	76843225
R432	10 KΩ	N-0281EEC	76843103
R433	10 KΩ	N-0281EEC	76843103
R434	10 KΩ	N-0281EEC	76843103
R435	10 KΩ	N-0281EEC	76843103
R436	10 KΩ	N-0281EEC	76843103
R437	10 KΩ	N-0281EEC	76843103
R438	10 KΩ	N-0281EEC	76843103
R439	Not used		
R440	100 KΩ	N-0371EEC	76843104
R441	2.2 MΩ	N-0454EEC	76843225
R442	22 KΩ	N-0311EEC	76843223
*R443	2.2 MΩ	N-0454EEC	76843225
R445	33 KΩ	N-0324EEC	76843333
R446	33 KΩ	N-0324EEC	76843333
R451a,b	10 KΩ	N-0281EEC	76843103
R452a,b	10 KΩ	N-0281EEC	76843103
R501a,b	1.5 KΩ	N-0206EEC	76843152
R502a,b	51 KΩ	N-0344EEC	76843513
R503a,b	160 Ω	N-0143EEC	76843161
R504a,b	7.5 KΩ	N-0266EEC	76843752
R505a,b	100 KΩ	N-0371EEC	76843104
R506a,b	100 KΩ	N-0371EEC	76843104
R507a,b	1.5 KΩ	N-0206EEC	76843152
R508a,b	51 KΩ	N-0344EEC	76843513
R509a,b	160 Ω	N-0143EEC	76843161
R510a,b	7.5 KΩ	N-0266EEC	76843752
R511a,b	100 KΩ	N-0371EEC	76843104
R512a,b	100 KΩ	N-0371EEC	76843104
R513a,b	1 KΩ	N-0196EEC	76843102
R514a,b	1 KΩ	N-0196EEC	76843102
R601a,b	1 KΩ	N-0196EEC	76843102
R602a,b	56 KΩ	N-0345EEC	76843563
*R603a,b	220 Ω	N-0149EEC	76843221
*R604a,b	220 Ω	N-0149EEC	76843221
R605a,b	680 Ω	N-0183EEC	76843681
R606a,b	10 KΩ	N-0281EEC	76843103
R607a,b	10 KΩ	N-0281EEC	76843103
R608a,b	10 KΩ	N-0281EEC	76843103
R609a,b	680 Ω	N-0183EEC	76843681
⚠ R610a,b	Carbon, Fail Safe, 47Ω 1/4W ±5%	RX-0482	72843470
R611a,b	2.2 KΩ	N-0216EEC	76843222
R612a,b	56 KΩ	N-0345EEC	76843563
⚠ R613a,b	Carbon, Fail Safe, 33Ω 1/4W ±5%	RX-0481	72843330
⚠ R614a,b	Carbon, Fail Safe, 33Ω 1/4W ±5%	RX-0481	72843330
R615a,b	3.3 KΩ	N-0230EEC	76843332
R616a,b	750 Ω	N-0185EEC	76843751
R617a,b	3.3 KΩ	N-0230EEC	76843332
⚠ R618a,b	Carbon, Fail Safe, 100Ω 1/4W ±5%	RX-0175	72843101
⚠ R619a,b	Carbon, Fail Safe, 10Ω 1/4W ±5%	RX-0174	72843100
⚠ R620a,b	Carbon, Fail Safe, 10Ω 1/4W ±5%	RX-0174	72843100
R621a,c	Cement Plate, 0.39Ω x 2 5W ±10%	RX-0483	79504399
R621b,d	Cement Plate 0.39Ω x 2 5W ±10%	RX-0483	79504399
R622a,b	Metal Oxide, 10 Ω 2W ±5%	N-0063EHD	78263100
*R623a,b	3 KΩ	N-0226EEC	76843302
R624a,b	300 Ω	N-0158EEC	76843301
R625a,b	10 KΩ	N-0281EEC	76843103
R626a,b	150 KΩ	N-0384EEC	76843154
R627a,b	Metal Oxide, 10 Ω 2W ±5%	N-0063EHD	78263100

*R443: for Australian models only

*R603a,b, R604a,b: Carbon, Fail safe, 220Ω 1/4W ±5% for Canadian models

Ref. No.	Description	R/S Part No.	Mfr's Part No.
R628	47 KΩ	N-0340EEC	76843473
R629a,b	56 KΩ	N-0345EEC	76843563
R630a,b	1 KΩ	N-0196EEC	76843102
R631a,b	1 KΩ	N-0196EEC	76843102
R632a,b	18 KΩ	N-0303EEC	76843183
R633a,b	Cement Plate, 0.1 Ω 5W ±5%	N-0001FKF	79594109
R634a,b	1 KΩ	N-0196EEC	76843102
R635a,b	18 KΩ	N-0303EEC	76843183
R636a,b	560 Ω	N-0176EEC	76843561
R637a,b	4.7 KΩ	N-0247EEC	76843472
R638a,b	47 KΩ	N-0340EEC	76843473
R639a,b	47 KΩ	N-0340EEC	76843473
R640a,b	1 MΩ	N-0445EEC	76843105
R641a,b	Metal Oxide, 330 Ω 2W ±5%	N-0159EHD	78263331
R642a,b	100 KΩ	N-0371EEC	76843104
R643a,b	820 Ω	N-0187EEC	76843821
R644	22 KΩ	N-0311EEC	76843223
R645	22 KΩ	N-0311EEC	76843223
R646	6.2 KΩ	N-0260EEC	76843622
R647	12 KΩ	N-0288EEC	76843123
R648	Metal Oxide, 680 Ω 1W ±5%	N-0183EGD	78163681
R649	100 KΩ	N-0371EEC	76843104
R650	15 KΩ	N-0297EEC	76843153
R651	22 KΩ	N-0311EEC	76843223
R652	3.3 KΩ	N-0230EEC	76843332
R653a,b	100 Ω	N-0132EEC	76843101
*⚠R654a,b	Carbon, Fail Safe, 100 Ω 1/4W ±5%	RX-0175	72843101
*⚠R655a,b	Carbon, Fail Safe, 100 Ω 1/4W ±5%	RX-0175	72843101
R701	1.5 KΩ	N-0206EEC	76843152
R702	22 KΩ	N-0311EEC	76843223
R703	56 KΩ	N-0345EEC	76843563
R710a,b	1 KΩ	N-0196EEC	76843102
R711a,b	1 KΩ	N-0196EEC	76843102
R712a,b	1 KΩ	N-0196EEC	76843102
R713a,b	1 KΩ	N-0196EEC	76843102
R714a,b	1 KΩ	N-0196EEC	76843102
R715a,b	4.7 KΩ	N-0247EEC	76843472
R801	Metal Oxide, 56 Ω 3W ±5%	N-0107EJD	78363560
R802	Metal Oxide, 56 Ω 3W ±5%	N-0107EJD	78363560
⚠R803	Carbon, Fail Safe, 100 Ω 1/4W ±5%	RX-0175	72843101
R804	10 KΩ	N-0281EEC	76843103
R805	16 KΩ	N-0544EEC	76843163
R806	15 KΩ	N-0297EEC	76843153
R807	Carbon, Fail Safe, 220 Ω 1/4W ±5%	RX-0416	72843221
R808	22 KΩ	N-0311EEC	76843223
R809	22 KΩ	N-0311EEC	76843223
⚠R810	Carbon, Fail Safe, 100 Ω 1/4W ±5%	RX-0175	72843101
R811	15 KΩ	N-0297EEC	76843153
R812	4.7 KΩ	N-0247EEC	76843472
R813	33 KΩ	N-0324EEC	76843333
R814	2.7 KΩ	N-0224EEC	76843272
R815	680 Ω	N-0183EEC	76843681
R816	33 KΩ	N-0324EEC	76843333
R817	4.7 KΩ	N-0247EEC	76843472
R818	4.7 KΩ	N-0247EEC	76843472
R819	15 KΩ	N-0297EEC	76843153
*⚠R820	Carbon, Fail Safe, 2.2 Ω 1/4W ±5%		72843228
*⚠R821	Carbon, Fail Safe, 2.2 Ω 1/4W ±5%		72843228
*R851	Carbon, 2.2 MΩ 1/2W ±5%	XB-0414	76703225
R901a,b	220 KΩ	N-0396EEC	76843224
R902a,b	15 KΩ	N-0297EEC	76843153
R903a,b	1.8 KΩ	N-0210EEC	76843182
R904a,b	5.6 KΩ	N-0257EEC	76843562
R905a,b	5.6 KΩ	N-0257EEC	76843562
R906a,b	2.2 KΩ	N-0216EEC	76843222
R907a,b	5.6 KΩ	N-0257EEC	76843562
R908a,b	5.6 KΩ	N-0257EEC	76843562
R909a,b	15 KΩ	N-0297EEC	76843153
R910a,b	15 KΩ	N-0297EEC	76843153
R911a,b	11 KΩ	N-0285EEC	76843113
R912a,b	11 KΩ	N-0285EEC	76843113
R913a,b	1 MΩ	N-0445EEC	76843105
R914a,b	1 MΩ	N-0445EEC	76843105
R915a,b	220 KΩ	N-0396EEC	76843224
R916a,b	8.2 KΩ	N-0271EEC	76843822

* R654a,b, R655a,b, R821, R821: for Canadian models only
* R801, R802: Metal Oxide, 68 Ω 3W ±5% for Australian models
* R851: not used for Australian models

Ref. No.	Description	R/S Part No.	Mfr's Part No.	Ref. No.	Description	R/S Part No.	Mfr's Part No.
R917a,b	1 MΩ	N-0445EEC	76843105	⚠R921	Carbon, Fail Safe, 220 Ω 1/4W ±5%	RX-0416	72843221
R918a,b	2.4 KΩ	N-0219EEC	76843242				
R919a,b	5.6 KΩ	N-0257EEC	76843562	R922a,b	2.2 UΩ	N-0454EEC	76843225
⚠R920	Carbon, Fail Safe, 220 Ω 1/4W ±5%	RX-0416	72843221	R923a,b	5.6 KΩ	N-0257EEC	76843562

SWITCHES

Ref. No.	Description	R/S Part No.	Mfr's Part No.
⚠SW1	Push, POWER, SDLIP (USA, Australia) SDLIPB (Canada)	S-7665	27200282 27200311
SW2-SW3	Push, 2 Codes, SPEAKERS A, SPEAKERS B	S-3279	27200330
SW4-SW8	Push, 5 Codes, TONE DEFEAT, SUB FILTER, HIGH FILTER, LOUDNESS, MONO	S-3280	27200334
SW9-SW11	Push, 3 Codes, SEARCH, FM MUTE, MPX FIL	S-7714	27200332
SW12-SW16	Push, 5 Codes, PHONO 1, PHONO 2, AUX/TV, FM, AM	S-3277	27200329
SW17-SW20	Push, 4 Codes, TAPE 1, TAPE 2, TAPE DUBBING 2→1, TAPE DUBBING 1→2	S-3278	27200328
SW21	Tact, M1	S-2977	27200294
SW22	Tact, M2	S-2977	27200294
SW23	Tact, M3	S-2977	27200294
SW24	Tact, M4	S-2977	27200294
SW25	Tact, M5	S-2977	27200294
SW26	Tact, M6	S-2977	27200294
SW27	Tact, MEMO	S-2977	27200294
SW28	Tact, UP	S-2977	27200294
SW29	Tact, DOWN	S-2977	27200294

THERMISTORS

Ref. No.	Description	R/S Part No.	Mfr's Part No.
TH601	Posistor, PTH487A01BD471TS	RX-0415	204514710006
TH602	Posistor, PTH487A01BF471TS	RX-0453	204514710008
TH603a,b	TD5C220D	RX-0480	204502020002

TRANSISTORS

Ref. No.	Description	R/S Part No.	Part No.	Manufacturer	Substitute	
					Type No.	Manufacturer
TR201	2SC1675L, NPN	2SC1675	30201121			
TR202	2SC945A-P, Q, NPN	2SC945	30201693	NEC	2SC1815	Toshiba
TR203	2SC945A-P, Q, NPN	2SC945	30201693	NEC	2SC1815	Toshiba
TR204	Not Used					
TR205	2SC945A-P, Q, NPN	2SC945	30201693	NEC	2SC1815	Toshiba
TR301	2SC945A-P, Q, NPN	2SC945	30201693	NEC	2SC1815	Toshiba
TR302	2SC945A-P, Q, NPN	2SC945	30201693	NEC	2SC1815	Toshiba
TR401	2SK118-O, FET	2SK118	2050K0030002	Toshiba		
TR402	2SC945A-P, Q, NPN	2SC945	30201693	NEC	2SC1815	Toshiba
TR403	2SC945A-P, Q, NPN	2SC945	30201693	NEC	2SC1815	Toshiba
TR404	2SC945A-P, Q, NPN	2SC945	30201693	NEC	2SC1815	Toshiba

Ref. No.	Description	R/S Part No.	Part No.	Manufacturer	Substitute	
					Type No.	Manufacturer
TR405	2SC945A-P, Q, NPN	2SC945	30201693	NEC	2SC1815	Toshiba
TR406	2SC945A-P, Q, NPN	2SC945	30201693	NEC	2SC1815	Toshiba
TR407	2SA733-P, Q, PNP	2SA733	30000425	NEC	2SA1015	Toshiba
*TR408	2SC945A-P, Q, NPN	2SC945	30201693	NEC	2SC1815	Toshiba
TR601a,b	2SC1841-E, F, NPN	2SC1841	30201603	NEC		
TR602a,b	2SC1841-E, F, NPN	2SC1841	30201603	NEC		
TR603a,b	2SA733-P, Q, PNP	2SA733	30000425	NEC	2SA1015	Toshiba
TR604a,b	2SC945A-P, Q, NPN	2SC945	30201693	NEC	2SC1815	Toshiba
TR605a,b	2SA1145-O, Y, PNP	2SA1145	2050A1145002	Toshiba	2SA916	NEC
TR606a,b	2SC2705-O, Y, NPN	2SC2705	2050C2705002	Toshiba	2SC1941	NEC
TR607a,b	2SC945A-P, Q, NPN	2SC945	30201693	NEC	2SC1815	Toshiba
TR608a,b	2SC2690A-P, Q, NPN	2SC2690	2050C2690A26	NEC		
TR609a,b	2SA1220A-P, Q, PNP	2SA1220	2050A1220A26	NEC		
TR610a,b	2SC3012, NPN	2SC3012	2050C3012006	NEC		
TR611a,b	2SA1232, PNP	2SA1232	2050A1232006	NEC		
TR612a,b	2SC1841-E, F, NPN	2SC1841	30201603	NEC		
TR613	2SA1346, PNP	2SA1346	2050A1346001	Sanyo		
TR614	2SC3400, NPN	2SC3400	2050C3400001	Sanyo		
TR801	2SC945A-P, Q, NPN	2SC945	30201693	NEC	2SC1815	Toshiba
TR802	2SB605, PNP	2SB605	2050B0605006	NEC		
TR803	2SA733-P, Q, PNP	2SA733	30000425	NEC	2SA1015	Toshiba
TR804	2SA733-P, Q, PNP	2SA733	30000425	NEC	2SA1015	Toshiba
TR805	2SC1841-E, F, NPN	2SC1841	30201603	NEC		
TR806	2SA953-L, M, PNP	2SA953	30000793	NEC		
TR807	2SA988-E, F, PNP	2SA988	30000803	NEC		
TR808	2SC2003-L, M, NPN	2SC2003	2050C2003006	NEC		

VARIABLE CAPACITOR

Ref. No.	Description	R/S Part No.	Mfr's Part No.
TC201	Trimmer, CTY122D47	C-1339	26010141

VARIABLE RESISTORS

Ref. No.	Description	R/S Part No.	Mfr's Part No.
VR201	Semi-Variable, 50 KΩB, FM Muting Level	P-0880	28101503
VR202	Semi-Variable, 100 KΩB, FM Signal Level	P-0879	28101104
VR203	Semi-Variable, 10 KΩB, AM Signal Level	P-0868	28101103
VR301	Semi-Variable, 500 KΩB, Leak Carrier	P-7074	28101504
VR302	Semi-Variable, 500 KΩB, Separation	P-7074	28101504
VR303	Semi-Variable, 10 KΩB, 19 kHz	P-0868	28101103

*TR408: for Australian models only

Ref. No.	Description	R/S Part No.	Mfr's Part No.
VR901a,b	Pot., 200 KΩB x 2, VOLUME	P-2308	206002105401
VR902	Pot., 250 KΩW, BALANCE	P-3333	206001005901
VR903a,b	Pot., 100 KΩB x 2, TREBLE	P-7762	206002105501
VR904a,b	Pot., 100 KΩB x 2, MID	P-7762	206002105501
VR905a,b	Pot., 100 KΩB x 2, BASS	P-7762	206002105501

MECHANICAL PARTS LIST

Ref. No.	Description	R/S Part No.	Mfr's Part No.
1	Terminal, Antenna	A-4551	53045900
2	Connector, Antenna, F-Type	A-4550	34193001
3	Terminal, 8P Speaker	J-5108	53083300
4	Jack, 4P Pin	J-1356	33041500
5	Jack, 6P Pin	J-1368	33060900
6	Jack, Headphone	J-5412	33034600
7	Heat Sink for TR608a,b, TR609a,b		15204001
8	Heat Sink for TR610a,b, TR611a,b		15184001
9	Bracket, PCB		63685002
10	Bracket, PCB		63731001
11	Heat Sink for D809, D810		15203001
12	Heat Sink for IC801		15160001
13	Panel, Rear	Z-8153	11814A03
14	Cord, AC	W-1000	62110106
15	Relief, Cord Strain, SR4N4	HC-3073	74289001
16	Receptacle, AC	J-5423	34151001
17	Antenna, Line Cord	H-3533	63101001
18	Lug, Ground		63739001
19	Holder, Fuse	F-1410	34064001
20	Chassis, Front		03143001
21	Cushion, FL		74352001
22	Plate, Shield		09154002
23	Chassis, Side, Left		04107002
24	Chassis, Side, Right		04097003
25	Bracket, Top Cover		63684001
26	Bracket, PCB		63675002
27	Panel, Mold	Z-8155	84681002
28	Clip		63520001
29	Mask, FL		84682001
30	Core, Push Button		84659001
31	Button, Push, SPEAKERS A, SPEAKERS B, TONE DEFEAT, SUB FILTER, LOUDNESS, MONO, SEARCH, FM MUTE, MPX-FIL	K-6290	29610002
32	Button, Push, TAPE MONITOR 1, TAPE MONITOR 2, TAPE DUB 2→1, TAPE DUB 1→2, AUX/TV, FM/AM	K-6291	29687001
33	Button, Push, TUNING	K-6292	29688001
34	Button, Push, MEMORY, M1 ~ M6	K-6293	29689001
35	Panel, Front	Z-8156	10814A01
36	Knob, VOLUME	K-5738	29612001
37	Knob, TREBLE, MID, BASS	K-5739	29613001
38	Knob, BALANCE	K-5740	29614001
39	Cover, Acryl	Z-8158	84683002
40	Cover, Top	Z-8157	70096001
41	Cabinet, Side	Z-7491	85118001
42	Foot, Plastic	F-0394	84577001
43	Plate, Bottom		05096001
44	Knob, POWER	K-6294	29686001
45	Cloth, Top Cover		73320001
46	Core, Ferrite		32000001
47	Screw, Bind Head, Tite-B M3 x 6	HD-2541	40630061
48	Screw, Pan Head, SEMS-B M3 x 10		40000214
49	Screw, Brazier Head, Tite-C M3 x 8 Boss	HD-2546	40000120
50	Screw, Flat Head, M3 x 6	HD-3402	40000175
51	Screw, Bind Head, Tite-B M3 x 8 BLK	HD-2057	40630085

Ref. No.	Description	R/S Part No.	Mfr's Part No.
52	Screw, Pan Head, Tite-B M3 x 6	HD-3026	40130061
53	Screw, Bind Head, Tite-B M4 x 6	HD-2545	40640061
54	Screw, Flat Head, Tite-B M3 x 6	HD-3405	40000128
55	Screw, Bind Head, Tite-B M3 x 10		40630101
56	Screw, Pan Head, Tite-B M4 x 20 Flange		40000235
57	Lug, M3	H-3532	51036001
58	Fiber, Antenna	HC-2484	75017003
59	Connector W/Leads, SCN-SCN 6P x 130, Female	J-5407	62900420
60	Connector W/Leads, XH-SCN 2P x 120, Female	J-7451	62900369
61	Connector W/Leads, XH-SCN 2P x 350, Female	J-5404	62900421
62	Connector W/Leads, XH-SCN 2P x 380, Female	J-5403	62900422
63	Connector W/Leads, XH-SCN 2P x 360, Female	J-5405	62900423
64	Connector W/Leads, XH-SCN 7P x 350, Female	J-5408	62900398
65	Connector W/Leads, XH-SCN 7P x 130, Female	J-5409	62900399
66	Connector W/Leads, XH-SCN 2P x 150, Female	J-5410	62900400
67	Connector W/Leads, XH-SCN 2P x 180, Female	J-5413	62900401
68	Connector W/Leads, XH-SCN 2P x 220, Female	J-5417	62900402
69	Connector W/Leads, XH-SCN 8P x 160, Female	J-5414	62900397
70	Connector W/Leads, XH-SCN 7P x 130, Female	J-5418	62900403
71	Connector W/Leads, M60 2P x 300, Female	J-7454	62900368
72	Connector W/Leads, XH-SIN 8P x 360, Female	J-5419	62900406
73	Connector W/Leads, XH-SIN 5P x 300, Female	J-5420	62900407
74	Connector W/Leads, XH-SCN 3P x 100, Female	J-5422	62900404
75	Connector W/Leads, XH-SCN 2P x 280, Female		62900405
76	Connector, B8B-XH-A, Male		87008048
77	Connector, B7B-XH-A, Male		87007048
78	Connector, S2B-XH-A, Male		87002047
79	Connector, S8B-XH-A, Male		87008047
80	Connector, S3B-XH-A, Male		87003047
81	Connector, B3B-XH-A, Male		87003048
82	Connector, S7B-XH-A, Male		87005047
83	Connector, M60-2P, Male	J-5046	87002032
84	Connector, B2B-XH-A, Male		87002048
3	Terminal, 8P Speaker (Canada)		53083500
13	Panel, Rear (Canada)		11814B02
13	Panel, Rear (Australia)		11814D04
16	Receptacle, AC (Canada)		34152001
14	Cord, AC (Canada)		62110125
14	Cord, AC (Australia)		62010013
17	Antenna, Line Cord (Canada, Australia)		63247001
58	Fiber, Antenna (Canada, Australia)		75043001
15	Relief, Cord Strain, 5P4 (Australia)		74045001
19	Holder, Fuse (Canada)		34194001
19	Holder, Fuse (Australia)		34065001
	Terminal, 2P, SK-1 (Australia)		51094003

SEMICONDUCTOR LEAD IDENTIFICATION

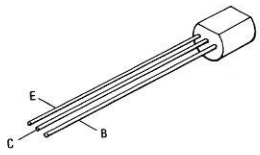

2SC945
TR202 TR203
TR205 TR301
TR302 TR402
TR403 TR404
TR405 TR406
TR408*
TR604a,b
TR607a,b
TR801

2SA733
TR407
TR603a,b
TR803
TR804

2SC1675
TR201

2SC1841
TR601a,b
TR602a,b
TR612a,b
TR805

2SA953
TR806

2SA988
TR807

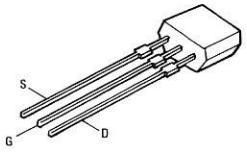

2SK118
TR401

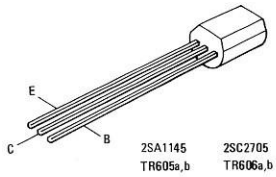

2SA1145
TR605a,b

2SC2705
TR606a,b

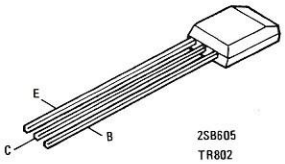

2SB605
TR802

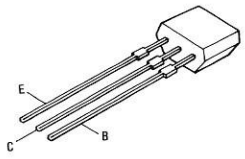

2SC3400
TR614

2SA1346
TR613

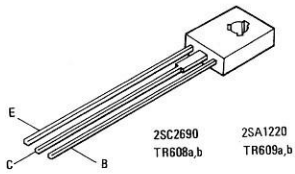

2SC2690
TR608a,b

2SA1220
TR609a,b

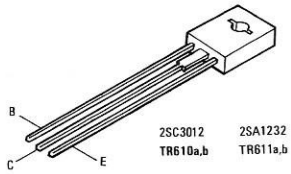

2SC3012
TR610a,b

2SA1232
TR611a,b

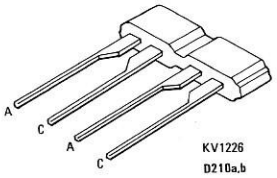

KV1226
D210a,b

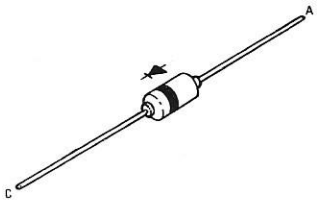

DS442X
D201～D204
D206～D208
D211 D408
D302～D307
D309 D310
D401～D406
D410 D411
D413 D414
D602a,b
D605a,b
D606a,b
D607～D609
D807

RD2.7EB2
D308

RD3.3EB2
D416

RD5.1EB2
D412

RD11EB3
D409

RD12EB2
D301
D601a,b

RD24EB2
D805

RD30EB2
D806

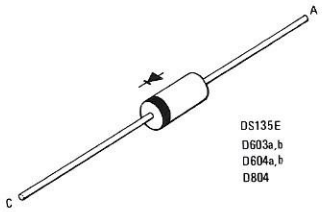

DS135E
D603a,b
D604a,b
D804

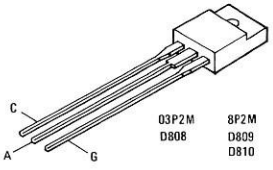

03P2M
D808

8P2M
D809
D810

GL-9PR24
D610

SLR34MC3F
D701～D705

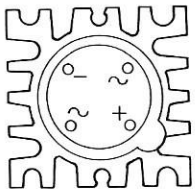

DBB50C
D801
D802

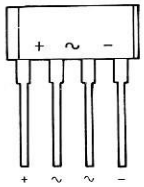

DBA10C
D803

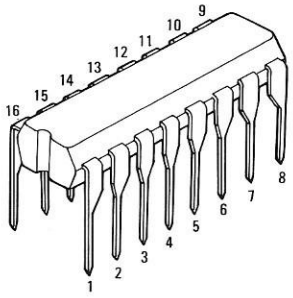

IC201
μPC1167C2

IC202
LA1240

IC301
μPC1161C3

IC404 IC405
BA6146

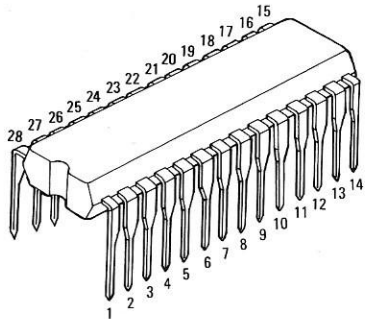

IC401
μPD1703C

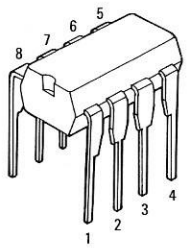

IC402
μPB553AC

IC603
LA6358

IC901
AN6558

IC902
IR94559

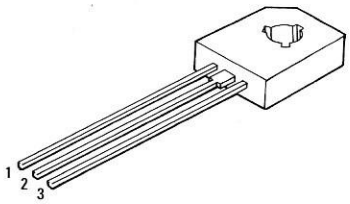

IC801
L78N15

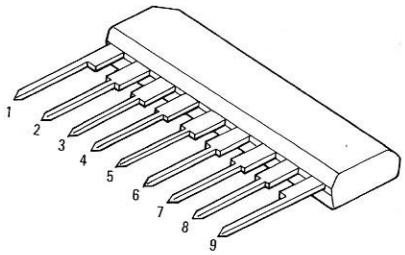

IC501 IC502
LA6458SS

IC601 IC602
LA6458S

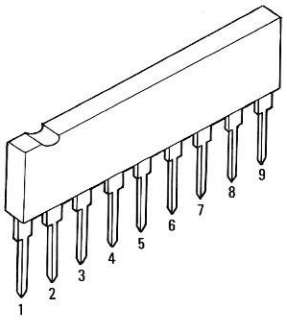

IC403
BA6137

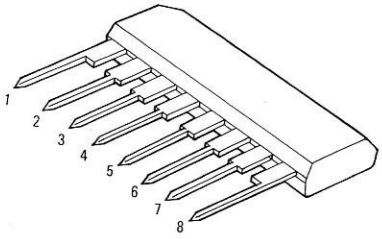

IC604
μPC1237H

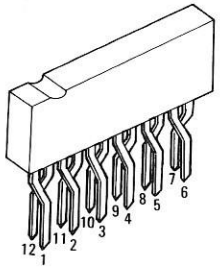

TRA401 TRA402
TA57

IC EQUIVALENT CIRCUITS

IC201
μPC1167C2

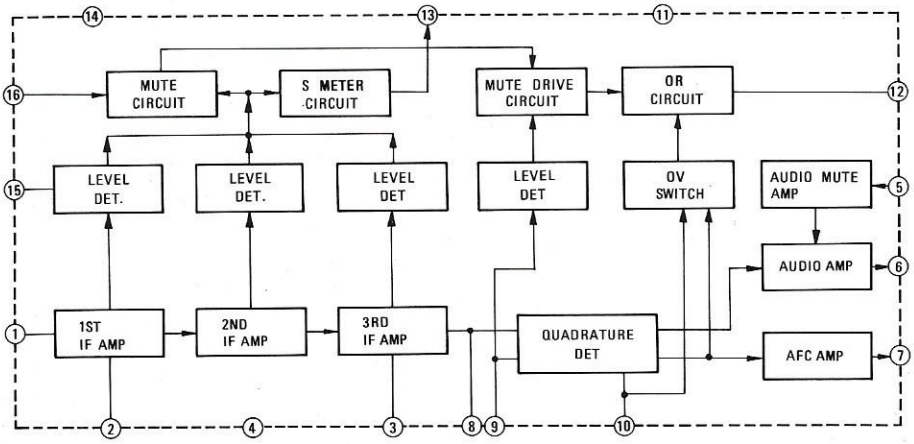

IC202
LA1240

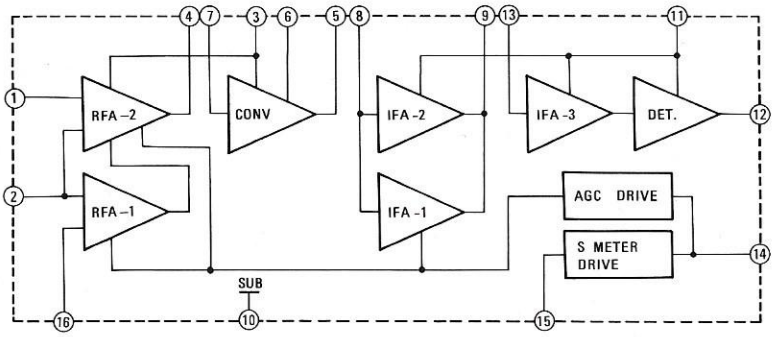

IC301
μPC1161C3

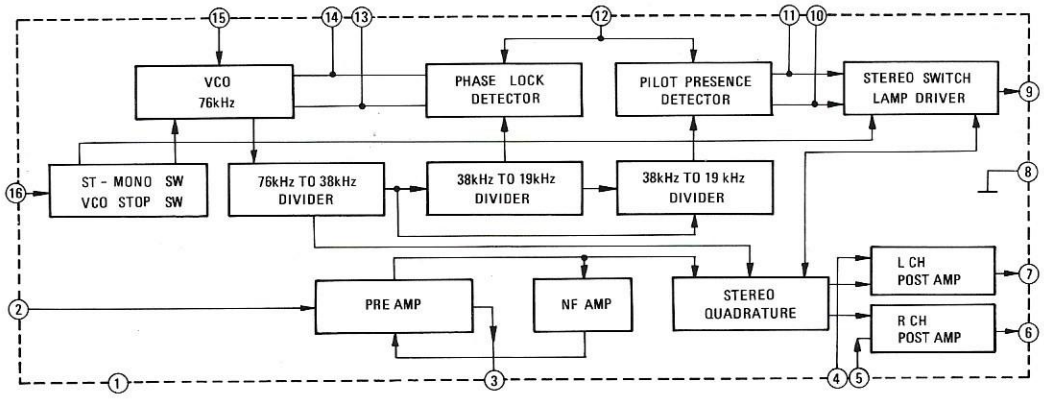

IC403
BA6137

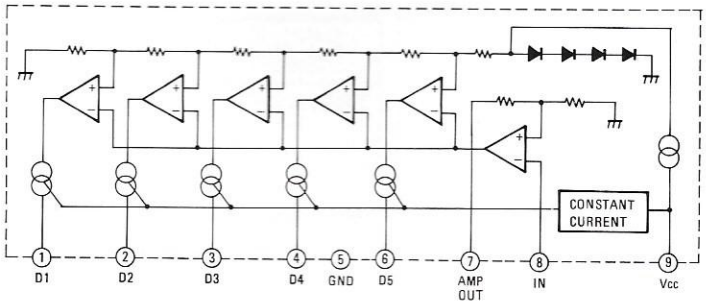

IC404 IC405
BA6146

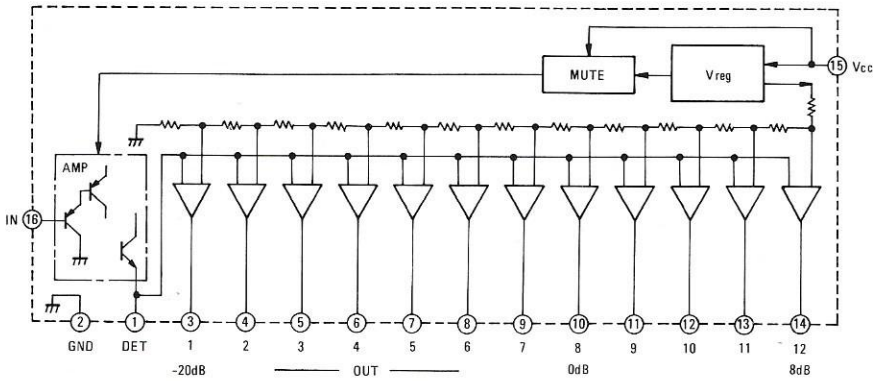

IC604
μPC1237H

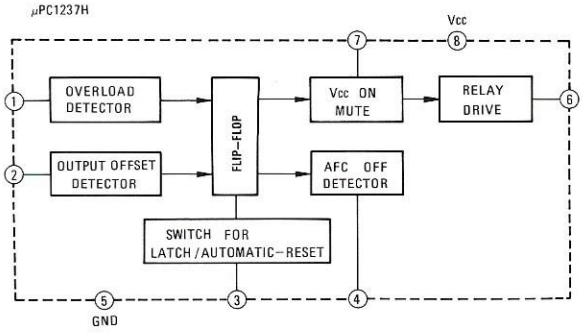

IC501 IC502
LA6458SS

IC601 IC602
LA6458

IC603
LA6358

IC901
AN6558

IC902
IR94559

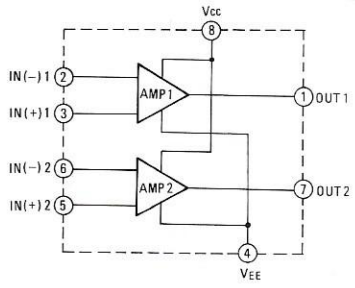

IC801
L78N15

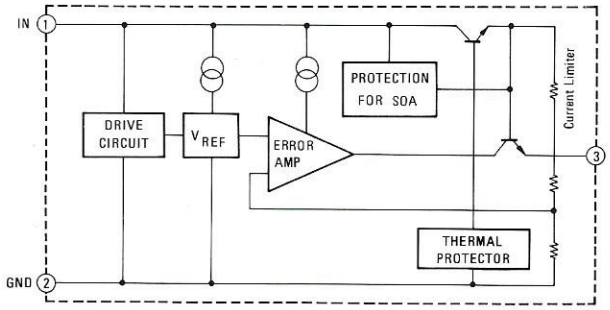

IC401
μPD1703C

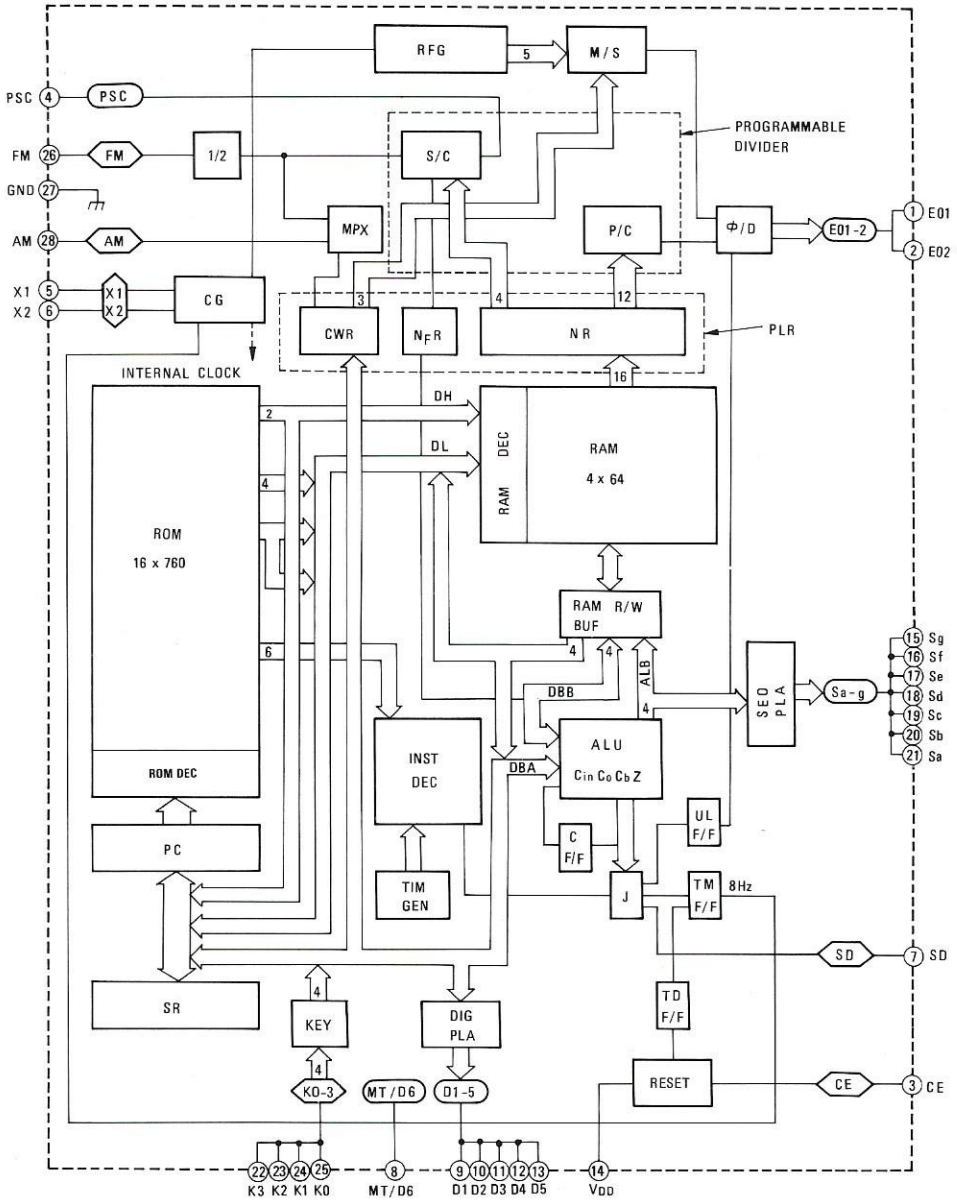

IC402
μPB553AC

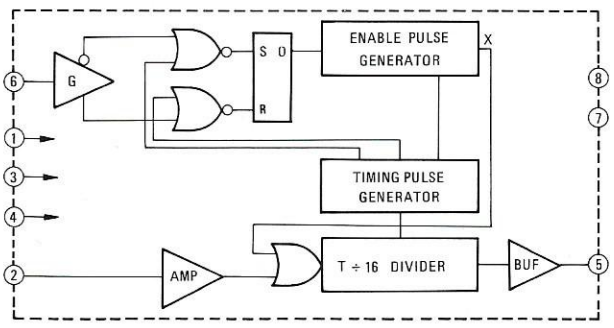

TRA401 TRA402
TA57

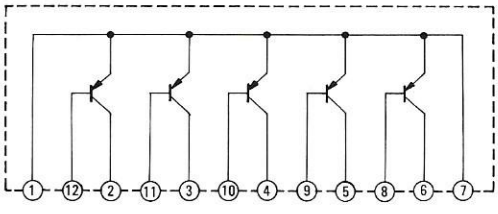

SEMICONDUCTOR VOLTAGE READINGS

Ref. No.		FM: No Signal	FM: 98.1MHz 1mV Input
TR201	B	2.1V	2.1V
	C	13.4V	13.4V
	E	1.3V	1.3V
TR202	B	0.8V	0 V
	C	0.2V	5.4V
	E	0.2V	0.4V
TR203	B	0.2V	1.1V
	C	11.0V	0.4V
	E	0.2V	0.4V
Ref. No.		AM: No Signal	AM: 1000kHz 5mV Input
TR205	B	4.2V	4.2V
	C	15.2V	15.2V
	E	3.7V	3.7V
Ref. No.		FM: No Signal	
		MUTE: OFF	MUTE: ON
TR301	B	–1.5V	0.6V
	C	0 V	0 V
	E	0 V	0 V
TR302	B	–1.5V	0.6V
	C	0 V	0 V
	E	0 V	0 V
Ref. No.		AM: 1000kHz	FM: 98.1MHz
TR401	G	0.6V	0.6V
	S	0.4V	0.5V
	D	11.4V	7.9V
TR402	B	0.6V	0.6V
	C	11.4V	7.9V
	E	0 V	0 V
Ref. No.		Tuner Mode	Other Modes
TR403	B	0 V	0.6V
	C	5.0V	0 V
	E	0 V	0 V
Ref. No.		SEARCH: OFF	SEARCH: ON
TR404	B	–0.3V	1.7V
	C	1.1V	1.2V
	E	0 V	1.2V
Ref. No.		AM Mode	
TR405	B	3.2V	
	C	2.7V	
	E	2.7V	
Ref. No.		AM: No Signal	AM: 1000kHz 5mV Input
TR406	B	0.1V	3.8V
	C	–0.4V	3.4V
	E	–0.4V	3.8V

Ref. No.		FM: No Signal	FM: 1mV Stereo Input
TR407	B	13.8V	3.8V
	C	–2.9V	4.3V
	E	4.4V	4.3V

No Signal, No Load (Volume Minimum)

Ref. No.			Ref. No.		
TR601a,b	B	–0.2V	TR612a,b	B	0 V
	C	58.5V		C	59.4V
	E	–0.7V		E	0 V
TR602a,b	B	–0.2V	TR613	B	59.5V
	C	58.2V		C	0 V
	E	–0.7V		E	59.7V
TR603a,b	B	58.2V	TR614	B	0 V
	C	58.5V		C	0.1V
	E	58.8V		E	0 V
TR604a,b	B	–58.7V	TR801	B	28.1V
	C	–39.3V		C	45.1V
	E	–59.3V		E	27.6V
TR605a,b	B	58.5V	TR802	B	–16.0V
	C	1.2V		C	–39.5V
	E	59.0V		E	–15.5V
TR606a,b	B	–58.7V	TR803	B	0.6V
	C	–1.1V		C	–16.2V
	E	–59.3V		E	0 V
TR607a,b	B	–0.5V	TR804	B	–23.3V
	C	1.2V		C	–45.5V
	E	–1.1V		E	–28.8V
TR608a,b	B	1.2V	TR805	B	0.6V
	C	59.6V		C	0 V
	E	0.7V		E	0 V
TR609a,b	B	–1.2V	TR806	B	59.1V
	C	–59.9V		C	59.8V
	E	–0.6V		E	59.8V
TR610a,b	B	0.7V	TR807	B	0 V
	C	59.7V		C	0.6V
	E	0.1V		E	0.7V
TR611a,b	B	–0.6V	TR808	B	–59.8V
	C	–60.0V		C	–60.3V
	E	0 V		E	–60.3V

Ref. No.		FM: No Signal	FM: 98.1MHz 1mV Input
IC201	1	2.4V	2.4V
	2	2.4V	2.4V
	3	2.4V	2.4V
	4	0 V	0 V
	5	0 V	0 V
	6	6.3V	6.3V

Ref. No.		FM: No Signal	FM: 98.1MHz 1mV Input
IC201	7	6.2V	6.2V
	8	6.1V	6.1V
	9	6.1V	6.1V
	10	6.1V	6.1V
	11	12.8V	12.4V
	12	6.6V	0 V
	13	0.4V	3.3V
	14	0 V	0 V
	15	6.0V	0.8V
	16	5.4V	5.4V
Ref. No.		AM: No Signal	AM: 1000kHz 5mV Input
IC202	1	4.6V	4.6V
	2	1.6V	1.6V
	3	13.9V	13.9V
	4	9.6V	10.0V
	5	14.3V	14.3V
	6	3.4V	3.4V
	7	1.3V	1.3V
	8	2.7V	2.7V
	9	10.7V	12.2V
	10	0 V	0 V
	11	13.9V	13.9V
	12	1.5V	2.1V
	13	0.6V	0.6V
	14	1.6V	2.1V
	15	0 V	0.2V
	16	1.1V	1.1V
Ref. No.		FM: No Signal	FM: 98.1MHz 1mV Stereo Input
IC301	1	11.8V	11.8V
	2	2.4V	2.4V
	3	5.8V	5.8V
	4	9.7V	9.7V
	5	9.7V	9.7V
	6	5.8V	5.8V
	7	5.8V	5.8V
	8	0 V	0 V
	9	9.7V	0.6V
	10	2.5V	2.5V
	11	2.5V	2.5V
	12	2.5V	2.5V
	13	2.5V	2.5V
	14	2.5V	2.5V
	15	0.1V	3.3V
	16	10.5V	0.4V

Ref. No.		No Signal	
		FM: 98.1MHz	AM: 1000kHz
IC401	1	0.5V	0.5V
	2	0.2V	0.2V
	3	5.0V	5.0V
	4	0 V	0 V
	5	2.2V	2.2V
	6	2.1V	2.1V
	7	0 V	0 V
	8	0 V	0 V
	9	3.9V	3.9V
	10	3.9V	3.9V
	11	3.9V	3.9V
	12	3.9V	3.9V
	13	4.0V	4.0V
	14	4.4V	4.4V
	15	-14.0V	-22.5V
	16	-14.0V	-9.4V
	17	-16.8V	-4.4V
	18	-10.6V	-9.8V
	19	-1.4V	-2.1V
	20	-5.6V	-2.2V
	21	-9.9V	-2.0V
	22	1.2V	2.7V
	23	0 V	0 V
	24	1.2V	0 V
	25	0 V	0 V
	26	2.2V	5.1V
	27	0 V	0 V
	28	4.4V	2.3V
Ref. No.		FM: 98.1MHz Display	
IC402	1	4.6V	
	2	3.8V	
	3	0 V	
	4	0 V	
	5	3.2V	
	6	0 V	
	7	0 V	
	8	0 V	
Ref. No.		FM: 98.1MHz 1mV Input	
IC403	1	0.1V	
	2	0.1V	
	3	0.1V	
	4	0.1V	
	5	0 V	
	6	0.1V	
	7	2.7V	
	8	0.3V	
	9	4.3V	

No Signal, No Load (Volume Minimum)					
Ref. No.			Ref. No.		
IC404	1	-15.5V	IC502	1	15.3V
	2	-15.5V		2	0 V
	3	-11.5V		3	0 V
	4	-11.3V		4	0 V
	5	-11.2V		5	-15.5V
	6	-8.3V		6	0 V
	7	-11.2V		7	0 V
	8	-8.2V		8	0 V
	9	-8.2V		9	15.3V
	10	-11.2V	IC601	1	15.3V
	11	-8.2V		2	0 V
	12	-8.2V		3	0 V
	13	-11.3V		4	0 V
	14	-11.3V		5	-15.5V
	15	-3.3V		6	0 V
	16	-15.5V		7	0 V
IC405	1	-15.5V		8	0 V
	2	-15.5V		9	15.3V
	3	-11.5V	IC602	1	15.3V
	4	-11.3V		2	0 V
	5	-11.2V		3	0 V
	6	-8.3V		4	0 V
	7	-11.2V		5	-15.5V
	8	-8.2V		6	0 V
	9	-8.2V		7	0 V
	10	-11.2V		8	0 V
	11	-8.2V		9	15.3V
	12	-8.2V	IC603	1	0.2V
	13	-11.3V		2	0.7V
	14	-11.3V		3	0 V
	15	-3.3V		4	0 V
	16	-15.5V		5	0 V
IC501	1	15.3V		6	0.7V
	2	0 V		7	0.2V
	3	0 V		8	15.2V
	4	0 V	IC604	1	0 V
	5	-15.5V		2	0.1V
	6	0 V		3	0 V
	7	0 V		4	2.2V
	8	0 V		5	0 V
	9	15.3V		6	0.7V
				7	2.1V
				8	3.2V

No Signal, No Load (Volume Minimum)					
Ref. No.			Ref. No.		
IC801	1	27.1V	IC902	1	4.1V
	2	0 V		2	0.4V
	3	15.3V		3	0.4V
IC901	1	4.1V		4	-13.9V
	2	0.4V		5	0.4V
	3	0.4V		6	0.4V
	4	-13.9V		7	4.0V
	5	0.4V		8	13.5V
	6	0.4V			
	7	4.0V			
	8	13.5V			
Ref. No.		FM: 98.1MHz Display			
TRA401	1	4.4V			
	2	4.3V			
	3	4.3V			
	4	4.3V			
	5	4.3V			
	6	4.3V			
	7	4.3V			
	8	3.7V			
	9	3.7V			
	10	3.7V			
	11	3.7V			
	12	3.7V			
Rfe. No.		FM: 98.1MHz 1mV Input			
TRA402	1	4.4V			
	2	-19.1V			
	3	-19.1V			
	4	-19.1V			
	5	-19.1V			
	6	-19.7V			
	7	4.3V			
	8	4.3V			
	9	4.3V			
	10	4.3V			
	11	4.3V			
	12	4.3V			

RADIO SHACK, A DIVISION OF TANDY CORPORATION

U.S.A.: FORT WORTH, TEXAS 76102
CANADA: BARRIE, ONTARIO L4M 4W5

TANDY CORPORATION

AUSTRALIA	BELGIUM	U. K.
91 KURRAJONG AVENUE MOUNT DRUITT, N.S.W. 2770	PARC INDUSTRIEL 5140 NANINNE (NAMUR)	BILSTON ROAD WEDNESBURY WEST MIDLANDS WS10 7JN

11A4

Printed in Japan